# ETC

# Halcyon Diamond

## High End Systems



Type(s)

Project

Date

Notes

## GENERAL INFORMATION

Halcyon framing fixtures redefine standards for rental operations and fixed installations world-wide. Halcyon Diamond, the flagship fixture of the weather-rated Halcyon options, delivers up to 56,500 lumens from our Alloy light engine so users can choose to prioritize the "Highest Fidelity" or "Ultra-Brightest" output. Additional exceptional performance in color, framing precision, and overall consistency, as well as an IP54 rating, make this generation of Halcyon the ultimate choice for any venue.

### Applications

- Rental
- Outdoor Festivals
- Theatres
- Events
- Award Shows
- Schools
- Lecture Halls
- TV Studios
- House of Worship

### Product Features

- 1300 W Alloy White Light Engine capable of both 70 CRI Ultra-Bright and 93 CRI High Fidelity output
- Fixture output exceeding 56,500 lumens at 70 CRI and 41,300 lumens at 93 CRI
- High quality 13-lens optic system
- Extremely powerful 4.5°–55° zoom
- Dual wheel CMY and single wheel CTO color mixing system
- Six-position plus open color wheel
- Increased angle framing system for enhanced thrust and angle control and greater than 60% individual flag coverage
- 16-blade iris for extremely tight beam effects
- Proprietary Trifusion diffusion system with seamless diffusion transition in all optical positions
- Dual rotating gobo wheel with seven patterns plus open
- Dual prisms with simultaneous insertion
- Rotating animation wheel with more than 90° incline control
- Optional RigPOV camera kit provides livestream camera feed from the fixture's perspective
- Weather-tested and rated to IP54

## ORDERING INFORMATION

| Model | Description |
|---|---|
| HAL-D | Halcyon Diamond, in Carton with Recyclable Foam inserts, Black |
| HAL-D-CAM | Halcyon Diamond with RigPOV, in Carton with Recyclable Foam inserts, Black |
| RC-HAL-D | Road Case for Halcyon Diamond, Includes Molded Inserts for one fixture |

Color Options: Fixtures ship standard in black. White available by request.
Included Accessories: Fixture includes two (2) 180 mm single-hole Omega brackets, one (1) fixture power cord - bare ends to powerCON® TRUE1 compatible connector, and a safety cable.

### Accessories

| Model | Description |
|---|---|
| ACC-HAL-D-TH | Top Hat, Snoot for Halcyon Diamond |
| ACC-HAL-D-SPS | SpotPilot (Side) Handle with Iris and Intensity Control for Halcyon Diamond |
| ACC-HAL-D-SPR | SpotPilot (Rear) Handle with Iris and Intensity control for Halcyon Diamond |
| CT-5914 | Multiverse Connect Module |

# PRODUCT SPECIFICATIONS

## Source

| | |
|---|---|
| Engine | Alloy Dual Color Rendering LED Engine |
| LED Details | 1300 W |
| Field Lumens | See photometrics on page 4 |
| Max Integrating Sphere Lumens | 56,500 @ 70 CRI / 41,300 @ 93 CRI |
| LPW | 44 / 32 |
| LED Life | 50,000 hours |
| Native CCT | 6500 K / 6000 K |

## Color

| | |
|---|---|
| Color Mixing | Dual wheel cyan, magenta, and yellow |
| Color Temperature | Single wheel CTO variable down to 2700K |
| Color Wheel | Six (6) dichroic colors plus open |

## Optical

| | |
|---|---|
| Zoom Angle Range | 4.5°–54° |
| Gate Size | 30 mm |
| Aperture Size | 172 mm |
| Pattern Projection | Dual Rotating and indexable wheels with seven (7) interchangeable patterns plus open on each |
| Animation | Bi-directional rotating animation wheel with linear insertion, and incline control |
| Prism | Five-facet star and four-facet linear rotating prism with simultaneous insertion |
| Diffusion | Proprietary Trifusion diffusion system with seamless diffusion transition in all optical positions |
| Iris | 16-blade iris |
| Framing | Four-plane, Thrust/Angle framing system with improved low thrust control and 180° module rotation |
| Flicker Control/Hz Range | 2.4 kHz, 16 kHz, and 25 kHz |

## Control

| | |
|---|---|
| Input Method | DMX (5-pin) or Ethernet |
| Protocols | DMX via RS-485<br>Art-Net or sACN via Ethernet |
| Ethernet Pass-Thru | Passive Ethernet in and thru with and without power |
| Data Conversion | Patented data conversion system for Ethernet to DMX |
| Modes (Footprint) | Standard (60 channels) |
| RDM Functions | Yes |
| UI Type | Full-color graphical UI with 6-button navigational control<br>NFC Configuration |
| Local Control | Yes |
| Dimming Performance | 16-bit, DMX controlled |
| Wireless | Multiverse via optional Multiverse Connect Module (CT-5914) |

## Electrical

| | |
|---|---|
| Voltage Range | Auto-sensing: 100–120 V 50–60 Hz and 200-240 V 50-60 Hz |
| Input Method | REAN® power X Series Connectors |
| Wattage | 100-120 V - 1400 W<br>200-240 V - 1750 W |
| Fixtures per Circuit | 1 fixture (R20 module or similar)<br>Note: REAN power X Series connector rated for 20 A (120 V/60 Hz) and 16 A (240 V/50 Hz) |

## Thermal

| | |
|---|---|
| Ambient Operating Temp | -20°C to 40°C (-4°F to 104°F) |
| Fan Mode | Standard, Studio, and Linear Continuous control channel |

## Physical

| | |
|---|---|
| Pan and Tilt Range | 630/540° pan, 260° tilt |
| Materials | Steel and aluminum frame with aluminum and molded plastic covers |
| Color Options | Black, white by request |
| Mounting Options | Any orientation |
| IP Rating | IP54, for use both indoors and outdoors |
| Weight | 42.6 kg (94 lb) |
| Included Accessories | X Series IP65 to bare end fixture tail<br>Two (2) 180 mm single-hole Omega brackets<br>Safety cable |

## Warranty

| | |
|---|---|
| Warranty Details | etcconnect.com/Warranty |

## Regulatory & Compliance

| | |
|---|---|
| Approved regulatory standards | cETLus Listed<br>Listed to UL 1573<br>Certified to CSA STD. C22.2 No: 166<br>CE Compliant<br>UKCA Compliant<br>CB Certified |
| Complies to the ROHS directive | Yes |

## Safety

| | |
|---|---|
| Safety | Minimum distance to illuminated surface = 4.0 m (13.1 ft)<br>Minimum distance from fixture head to combustible materials = 0.1 m (4.0 in) |

**Notes:** All LED sources experience some lessening of light output and some color shift over time. LED output will vary with thermal conditions. Thermal conditions can be affected by ambient temperatures and orientation.

## FEATURE DETAILS

### Rotating Gobo Details

| | |
|---|---|
| Outside Diameter | 34.9 mm (1.37 in) |
| Image Diameter | 21 mm (0.83 in) |
| Materials | 1.1 mm fused silica |

| Rotating Gobo Wheel 1 | Rotating Gobo Wheel 2 |
|---|---|
| 1 - Wiggle Block | 1 - Texture Drops |
| 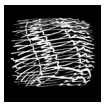 | 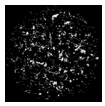 |
| 2 - Mycelium Patch | 2 - Lovely Bubbly |
|  | 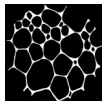 |
| 3 - Bob's Brush | 3 - Art Ducko |
| 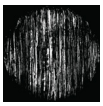 |  |
| 4 - The Claw | 4 - Window Matrix |
|  |  |
| 5 - Cut Cone | 5 - Swirly Gig |
|  |  |
| 6 - Split-S | 6 - Fenced In |
|  |  |
| 7 - Ice | 7 - The Only Way Is Up |
| 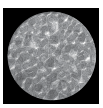 |  |

### Color Wheel Details

| | |
|---|---|
| Shape | Interchangeable wedge |
| Materials | 1.1 mm glass Borofloat® |

| | |
|---|---|
| 1 - Red | 2 - Blue |
| 3 - Yellow | 4 - Purple |
| 5 - Orange | 6 - Dark Blue |

### Prism Details

| | |
|---|---|
| Movement | Two prism flags with dual insertion |
| Materials | Molded optical glass |

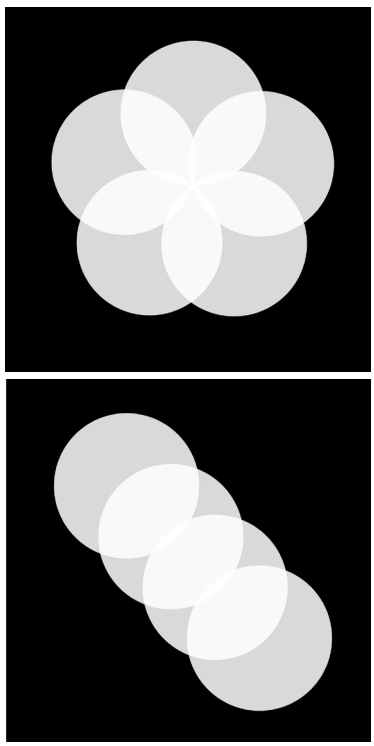

### Animation Wheel Details

| | |
|---|---|
| Movement | Bi-directional continuous rotation with Linear insertion with greater than 90° angular path range |
| Materials | 0.8 mm aluminum |

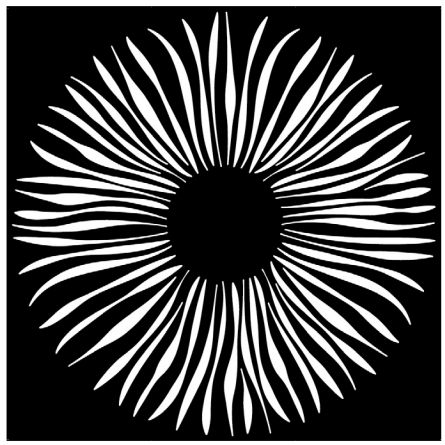

### RigPOV (Optional)

| | |
|---|---|
| Camera Type | 1080p low-latency camera |
| Communication | NDI HX, RTSP, RTMP, SRT |
| Connection | RJ45 port in fixture base, replaces Ethernet thru connection |
| Zoom/Focus | 20x motorized zoom and focus |
| Mounting | Exterior mounted with external screws for easy conversion |
| Weather Rated | Yes (IP54) when installed |

## PHOTOMETRIC DATA

### 6500 K

| | Degree | Candela (UB/HF) | Field Lumens (UB/HF) | Power Usage | Lumens Per Watt (UB/HF) |
|---|---|---|---|---|---|
| Narrow | 4.5° | 4,035,500 / 2,914,100 | 18,630 / 13,119 | 1300 W | 14 / 10 |
| Medium | 26° | 482,600 / 347,200 | 43,344 / 30,629 | 1300 W | 33 / 24 |
| Wide | 55° | 75,700 / 54,300 | 42,428 / 30,279 | 1300 W | 33 / 23 |

### 5600 K

| | Degree | Candela (UB/HF) | Field Lumens (UB/HF) | Power Usage | Lumens Per Watt (UB/HF) |
|---|---|---|---|---|---|
| Narrow | 4.5° | 3,138,448 / 2,506,199 | 14,489 / 11,283 | 1300 W | 11 / 9 |
| Medium | 26° | 375,323 / 298,601 | 33,709 / 26,342 | 1300 W | 26 / 20 |
| Wide | 55° | 58,873 / 46,699 | 32,997 / 26,041 | 1300 W | 25 / 20 |

### 4400 K

| | Degree | Candela (UB/HF) | Field Lumens (UB/HF) | Power Usage | Lumens Per Watt (UB/HF) |
|---|---|---|---|---|---|
| Narrow | 4.5° | 2,821,514 / 2,098,297 | 13,026 / 9,446 | 1300 W | 10 / 7 |
| Medium | 26° | 337,421 / 250,001 | 30,305 / 22,054 | 1300 W | 23 / 17 |
| Wide | 55° | 52,927 / 39,099 | 29,665 / 21,802 | 1300 W | 23 / 17 |

### 3200 K

| | Degree | Candela (UB/HF) | Field Lumens (UB/HF) | Power Usage | Lumens Per Watt (UB/HF) |
|---|---|---|---|---|---|
| Narrow | 4.5° | 2,441,564 / 1,777,674 | 11,272 / 8,003 | 1300 W | 9 / 6 |
| Medium | 26° | 291,983 / 211,801 | 26,224 / 18,684 | 1300 W | 20 / 14 |
| Wide | 55° | 45,800 / 33,124 | 25,670 / 18,471 | 1300 W | 20 / 14 |

To determine center beam illumination in footcandles at any throw distance (ft), divide candela by the throw distance (ft) squared. ftcd = candela/ft²

To determine center beam illumination in lux at any throw distance (m), divide candela by the throw distance (m) squared: lux = candela/m²

### Ultra-Bright TM-30

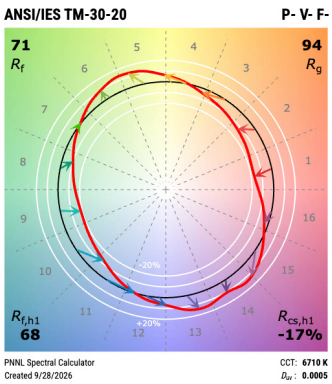


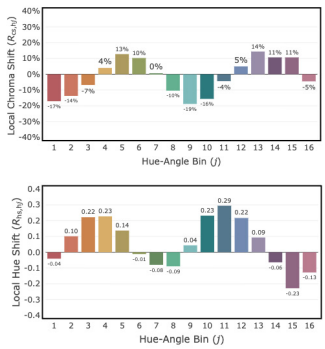


| Additional Color Metrics | |
|---|---|
| CRI $R_a$ ($R_g$) | 71 (-22) |
| TLCI | 48 |

### High Fidelity TM-30

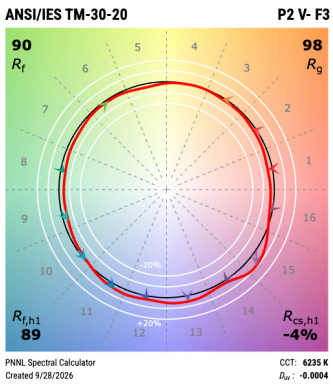


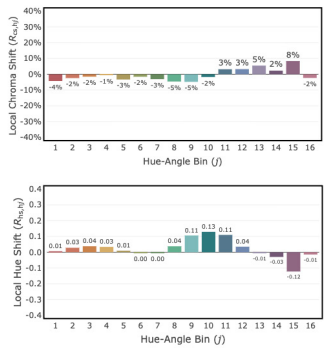


| Additional Color Metrics | |
|---|---|
| CRI $R_a$ ($R_g$) | 93 (76) |
| TLCI | 93 |

### Product Dimensions

| Model | Height | | Width | | Depth | | Weight | |
|---|---|---|---|---|---|---|---|---|
| | in | mm | in | mm | in | mm | lb | kg |
| Halcyon Diamond** | 31.5 | 799 | 17.8 | 451 | 12.4 | 315 | 94.0 | 42.6 |
| Halcyon Diamond in Box with Foam Insert | 34.5 | 875 | 21.1 | 535 | 17.1 | 435 | 107.5 | 48.75 |

**Does not include mounting hardware

### Halcyon Diamond

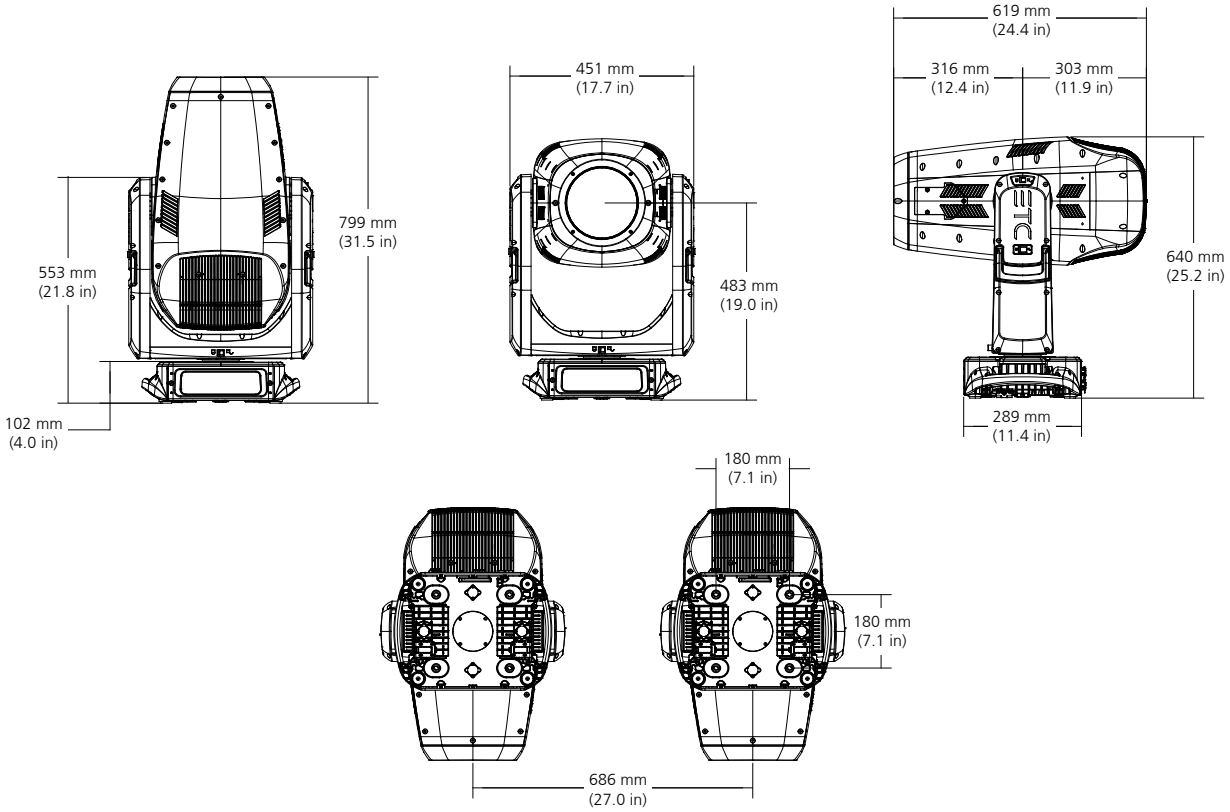


## WEATHER PROTECTED

Halcyon Diamond's rain-proof and dust-proof design allows it to be used in all types of weather and climates. Thanks to advanced IP54 design features and hydrophobic filtering techniques Diamond can be used outdoors just as readily as indoors, and all without additional maintenance, vacuum seal tests, or specialized tools.

### Outdoor related features

- Rain-Proof
- Dust-Proof
- Hydrophobic Air Filtering
- Cold Weather Preheating
- Control Loss Sun Protection
- Patented Defogging Technology

## ADDITIONAL ORDERING INFORMATION

### Additional Accessories

| Model Number | Description |
|---|---|
| ACC-HAL-D-CAM | RigPOV accessory, existing fixture install kit |
| OB180-3 | Omega bracket, 180 mm three-hole, black |
| OB180-1 | Omega bracket, 180 mm single-hole, black (Included) |
| T1PA-A | Fixture Power Cord Upgrade, 5 ft TRUE1 TOP to Parallel Blade U-Ground (Edison) |
| T1PA-SP | Fixture Power Cord Upgrade, Stage Pin to powerCON TRUE1 TOP, 20 A |
| T1PA-L620 | Fixture Power Cord Upgrade, L6-20 to powerCON TRUE1 TOP, 20 A |
| T1PA-L520 | Fixture Power Cord Upgrade, L5-20 to powerCON TRUE1 TOP, 20 A |
| MEGA-CLW | MegaClaw™ |
| HALF-COU | Half-Coupler, 2” Alloy, Truss Clamp |
| MI-HAL-D | Molded Insert for Halcyon Diamond, Black |

### Optional Roadcase Dimensions

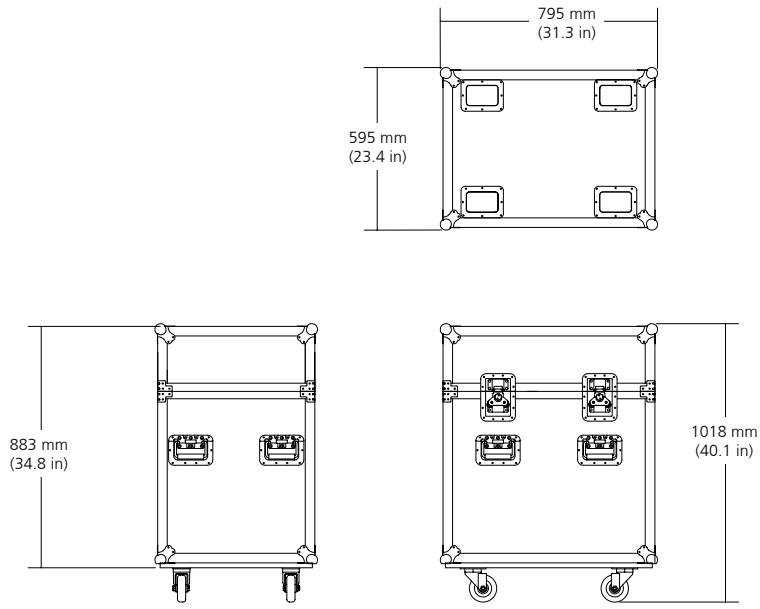


Case Weight:
40.1 kg (88.4 lb)
Includes Molded Insert and no Fixture

**Corporate Headquarters** ▪ Middleton, WI USA
**Global Offices** ▪ London, UK ▪ Rome, IT ▪ Holzkirchen, DE ▪ Paris, FR ▪ Hong Kong ▪ Dubai, UAE
New York, NY ▪ Orlando, FL ▪ Los Angeles, CA ▪ Austin, TX ▪ Squamish, BC ▪ Victor, NY
©2026 ETC. All Rights Reserved. All product information and specifications subject to change. Rev A 2026-11
*Trademark and patent info: etcconnect.com/IP ▪ Third-party license agreement info: etcconnect.com/licenses

**etcconnect.com**