JB LIGHTING

P9 BEAMSPOT

Operating instructions

Version 1.10

Software >= 1.0.7

Content

1. Introduction. 05
1.1 P9 Beamspot models 05
2. Dimensions 06
3. Product overview 07
4. Safety instructions 08
5. Installation. 10
5.1 Unpacking the device 10
5.2 Fitting the plug to the connection cable 10
5.3 Mains connection 11
5.4 Wiring the power feed-through 11
5.5 Signal connections 12
5.5.1 DMX cabling 12
5.5.2 Ethernet cabling 12
5.5.3 Wireless reception 12
5.6 Mounting the devices. 13
6. Control panel 14
6.1 Menu overview P9 Beamspot 16
6.2 FACTORY DEFAULTS - Factory settings 18
6.3 USER DEFAULTS - User settings 18
6.4 DMX / NET ADDRESS - DMX addressing / Artnet addressing / sACN addressing 18
6.5 PERSONALITY - Personal settings 18
6.6 STANDALONE operation 21
6.7 INFO-menu 22
6.8 Shortcuts - quick access 22
7. Control options. 23
7.1 DMX 23
7.1.1 Operating modes P9 Beamspot 23
7.1.2 DMX channel functions P9 Beamspot 24
7.1.3 Control channel 30
7.1.4 Sparkle effect, sparkle speed 30
7.1.5 Auto focus. 30
7.2 Artnet 30
7.3 Streaming ACN 31
7.4 Wireless-DMX 31
7.5 RDM 31
7.5.1 RDM-UID 31
7.5.2 RDM-PIDs. 31
7.5.3 Standard RDM parameter IDs 32
7.5.4 Manufacturer specific RDM parameter IDs. 32
7.5.5 RDM sensor IDs 33
8. Service. 33
8.1 Service menu. 33
8.2 Changing gobos 34
8.3 Gobo size 35
8.4 Software update 35
8.5 Testing of electrical equipment 35
8.6 Cleaning the device 36
8.7 Service and maintenance. 36
8.7.1 Inspection of lubricated moving parts 36
8.7.1 Checking the plastic parts 36
9. Overview of error codes for all fixtures 37
10. Specifications 39
11. Declaration of Conformity 40

1. Introduction

1.1 P9 Beamspot models

The P9 beam spot is available in the light color HP (High Power). It can also be operated without any problems in the light colors 5800K (CRI> 90) and 3200K.

Specification	HP - High Power	with High CRI filter	with CTO filter
Color temperature	6800 K	5800 K	3200 K
Luminosity	25.000 lm (15.000 lm output)	10.000 lm output	7.500 lm output
CRI	>= 70	>= 90	>= 85

2. Dimensions

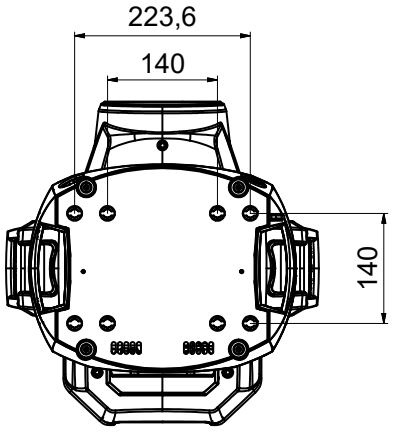

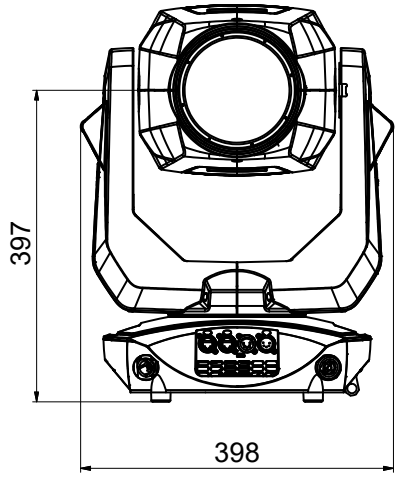

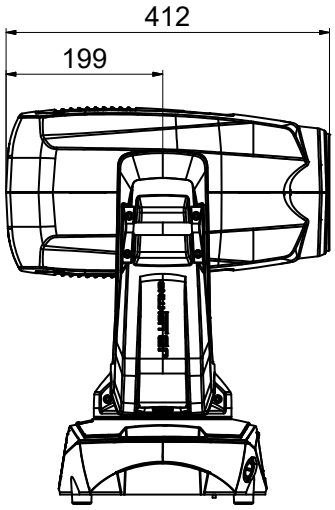

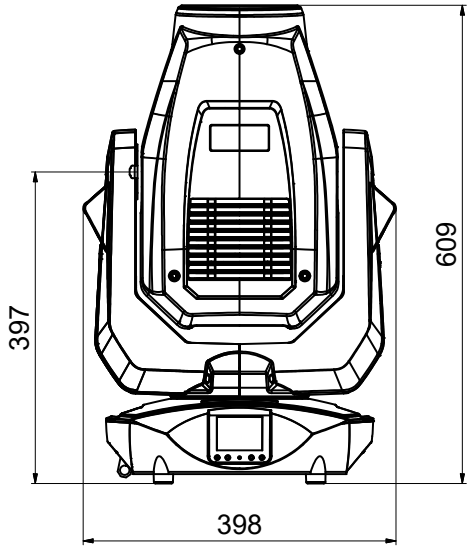

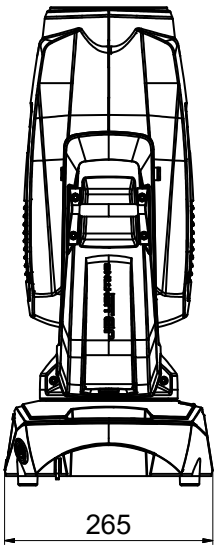

3. Product overview

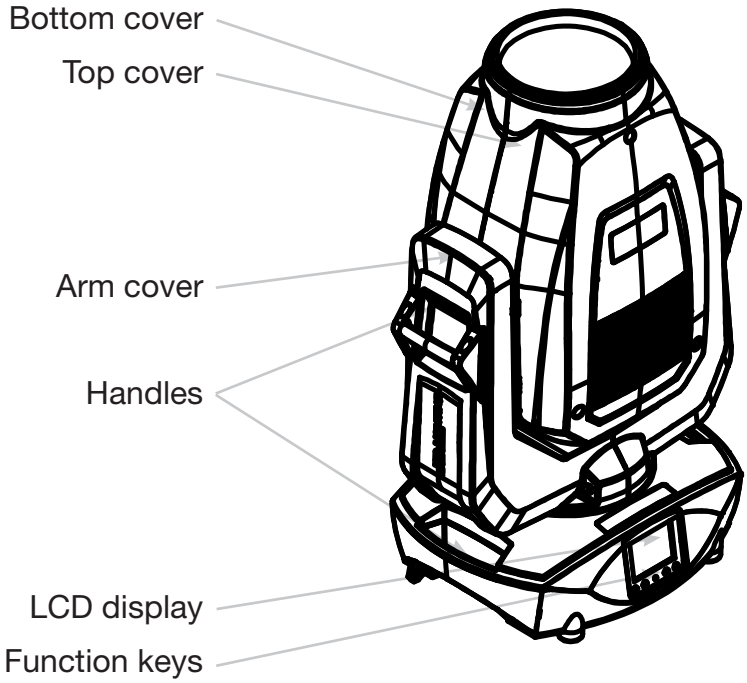

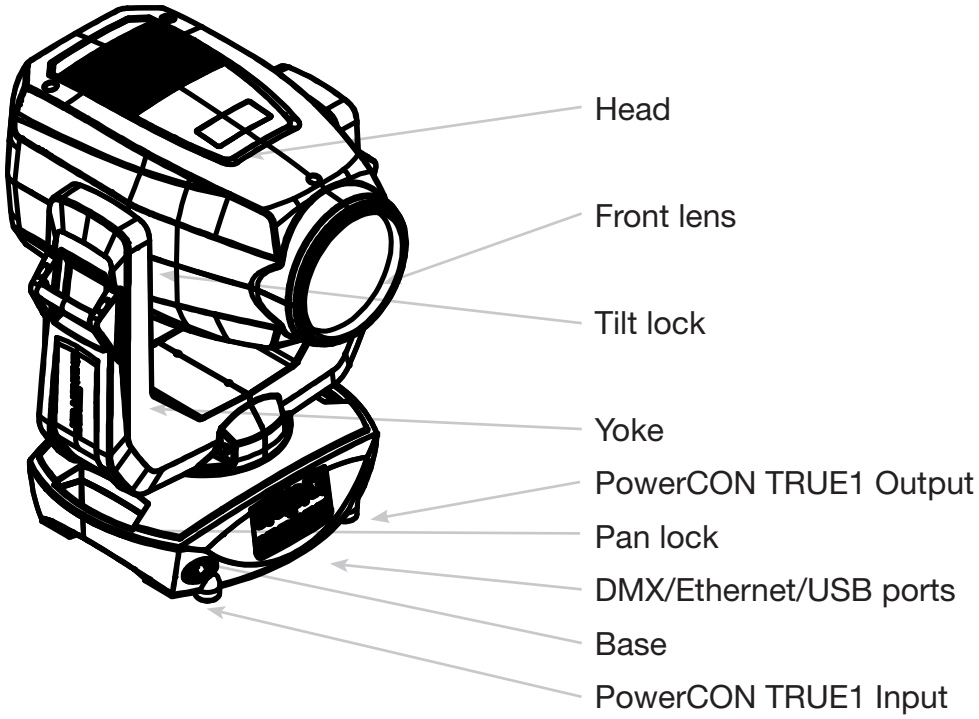

4. Safety instructions

ATTENTION: For your own safety, please read these operating instructions carefully before first use.

This spotlight has left our company in excellent condition. To maintain this condition and to ensure safe operation, it is absolutely essential to observe the following safety instructions and warnings which are described in this operating manual.

The manufacturer accepts no liability for damage caused to the device by disregard of these operating instructions or unauthorised modifications.

Please note that damage caused by manual modifications to this unit is not covered by the warranty.

ATTENTION: This device is only suitable for professional use! Protection class IP 20 - only for use in dry environments (indoors)!

ATTENTION: JB-Lighting Lichtanlagentechnik GmbH does not authorise the use of its devices in life support systems. Life-supporting systems are systems whose purpose is to maintain or stabilise life and whose defect or malfunction may result in death or injury to persons.
The product in this manual complies with the following EU directives:
- Low Voltage Directive 2014/35/EU
- EMC Directive 2014/30/EU

ATTENTION: Allow the device to cool down and disconnect the device from the mains before opening the device. Touching live parts (high voltage) can give you an electric shock.

Ensure that the mains voltage to be connected is not higher than that indicated on the type plate. This device should only be operated with the power source indicated on the type plate. If you are not sure what type of power supply you have, contact your dealer or power supplier.

Always disconnect the device from the power supply before carrying out cleaning work or before replacing fuses or parts.

The mains plug must always be accessible after the spotlight has been installed. Do not overload the sockets or extension cables as this could result in fire or electric shock. Do not place any objects on the power cable. Do not install the spotlight in such a way that people can trip over or step on the power cable. Make sure that the power cable can never be crushed or damaged by sharp edges. Check the unit and the power cable from time to time.

Leave maintenance work to a qualified technician!

ATTENTION: This fixture corresponds to protection class I. For this reason, this spotlight must be connected to a mains socket with earthing contact.

Never connect this device to a dimmer pack.

During first use, some smoke and odour may occur. This is normal and does not necessarily mean that the device is defective.

The device becomes hot during operation. Never touch the device with bare hands during operation!

When replacing fuses, only use the same types with identical values! Only have fuse replacement carried out by a qualified technician

ATTENTION: DAMAGE TO EYES! Do not look into the light source for long periods during operation. This can be harmful to the eyes. Attention: potentially hazardous radiation - Risk group 2 based on DIN EN 62471

If the device has been exposed to strong temperature fluctuations (e.g. after transport), the device must not be switched on immediately. The resulting condensation can damage your device. Leave the device switched off until it has reached room temperature.

Do not shake or knock the device. Avoid brute force during installation or operation.

This light was designed for indoor use only. Do not expose this device to rain or moisture.

When choosing a mounting location, make sure that the device is not exposed to extreme heat, moisture or dust.

Ventilation openings and slots in the head and foot of the spotlight are used for ventilation to ensure reliable operation of the device and to protect it from overheating, these openings must not be covered.

Never cover the front lens when the spotlight is in use.

The openings should never be covered with substances or other objects so that the airways are blocked.

This device must not be operated in an environment without adequate ventilation.

The device may only be operated when the housing is closed and all screws/Camlocs are firmly tightened.

The device must always be secured with an additional safety device.

Ensure that the area below the spotlight is clear during installation, alteration and removal.

ATTENTION: Allow a fixture distance of at least 0.5 metres from easily flammable material and the distance between the light emission and the surface to be illuminated must be at least 2.0 meters.

The maximum ambient temperature of 45°C must not be exceeded.

ATTENTION: The front lens must be replaced if it is visibly damaged to the extent that its function is impaired, e.g. by cracks or deep scratches!

Do not operate the device until you have become familiar with its functions. Prevent operation by persons who are not qualified to use the device. Most damage is the result of improper operation!

Please use the original packaging or specially adapted flight cases if the device is to be transported. When using the original packaging, the locks must not be closed!

ATTENTION: To avoid damaging the internal parts of the light head, never let sunlight shine directly into the front lens.

5. Installation

5.1 Unpacking the device

Contents of the packaging: This spotlight, two Omega brackets with original Camloc fasteners, powerCON-TRUE1 Schuko cable and a safety note. Open the packaging at the top and remove the powerCON TRUE1 cable, the inlay and the safety instructions. The Omega brackets are located under the spotlight. Check the P9 Beamspot for possible transport damage. This should be communicated immediately to the transport company.

5.2 Fitting the plug to the connection cable

The P9 Beamspot is supplied with an assembled Schuko power cable with the powerCON-TRUE1 plug (only the powerCON-TRUE1 plug is included in the US version). The connection of the P9 Beamspot to the power supply (100-240 volts, 50 - 60 hertz) must comply with the connection rules of the respective country.
Connection in Germany/Europe:

Wire colour	Function	Symbol
Brown	Phase	“L”
Blue	Neutral wire	“N”
Green/Yellow	Protective earth	“PE” ⏚

Connection outside Europe:
The P9 Beamspot may only be operated on the following power supply systems:

	Mains		P9
2 wires, 1 phase	L N	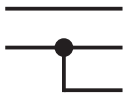	L N PE
3 wires, 1 phase	L N L	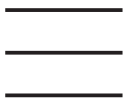	L N
4 wires, 3 phases	L_1 L_2 L_3 N		L N PE

ATTENTION:
In Canada, the P9 Beamspot may only be operated in a 2-wire, 1 phase network with a maximum voltage of 120V!

5.3 Mains connection

Connected loads: Voltage 100-240 V, frequency 50 - 60 Hz, power max. 460 VA

The electrical safety and function of the device can only be guaranteed if it is connected to a properly installed protective conductor system. It is very important that this basic safety requirement is met. If in doubt, have the electrical installation checked by a specialist. The manufacturer cannot be held responsible for damage caused by a missing or interrupted protective conductor (e.g. electric shock)! Only use the device when it is completely assembled so that no electrical components can be touched. **(Danger 100-240 V)**

If you have observed the listed points, you can plug in the devices or have them connected to the mains by a specialist.

ATTENTION: The P9 Beamspot can light up immediately if standalone operation is activated or a DMX signal is present!

5.4 Wiring the power feed-through

ATTENTION: Only have it carried out by a specialist!

The P9 Beamspot has a powerCON-TRUE1 out power output. Depending on the local conditions several devices can be linked by powerCON-TRUE1 in and powerCON-TRUE1 out. Connect a maximum of six (when using 230V/16A) P9 Beamspots in a row.
Use an approved three-core cable with a cross-section of at least 1.5 mm². Cabling must be done with the original Neutrik coded plugs. The installation instructions of the manufacturer (www.neutrik.com) and the colour coding of the cable must be observed.

Wire colour	Function	Symbol
Brown	Phase	“L”
Blue	Neutral wire	“N”
Green/Yellow	Protective earth	“PE” ⏚

5.5 Signal connections

5.5.1 DMX cabling

The DMX cabling (signal lines) should be done with a 4-pin cable with shielding. We recommend a DMX cable (110 Ohm, 2x0.22mm² or 4x0.22mm²). The plugs and sockets are 5-pin XLR connectors, which can be purchased in specialist shops.

Pin assignment:
Pin1 = Ground/Shielding
Pin2 = DMX -
Pin3 = DMX +
Pin4 = not connected
Pin5 = not connected

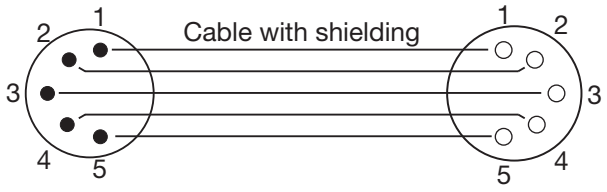

The P9 Beamspot has a DMX-in and DMX-out connector. Now connect the DMX output of your controller to the 1st P9 Beamspot (Controller DMX-Out -> P9 Beamspot DMX-In). Then the 1st P9 Beamspot with the 2nd P9 Beamspot (P9 Beamspot DMX-Out -> P9 Beamspot DMX-In) and so on. In some cases it is advisable to insert a so-called end connector (XLR connector with a 120 Ohm resistor between pin 2 and pin 3). Whether an end connector is required depends on various factors, including the cable lengths used and the number of devices. However, as long as no problems occur in the DMX line, this is not necessary.

5.5.2 Ethernet cabling

Ethernet cabling can be done with standard network lines. The sockets on the device are Neutrik etherCON sockets. Special cables with etherCON connectors are recommended by Neutrik. The two sockets on the P9 Beamspot are connected to each other via a switch. Up to 10 devices can be connected in series without any delay. Of course, the spotlights can also be supplied in a star configuration via an external switch. The received signal can be output via DMX. To do this, set the DMX OUTPUT CONFIG setting to ON in the PERSONALITY menu. After confirming with ENTER, the spotlight emits the entire universe received via DMX.

ATTENTION: Make sure that there is no signal at the DMX input at the same time !!

5.5.3 Wireless reception

The P9 Beamspot is equipped as standard with a **LumenRadio** CRMX receiver for wireless DMX. The receiver can process both DMX and RDM. If a cable and wireless connection are connected to the P9 Beamspot, the cable connection has priority! The received signal can be output via DMX. To do this, set the DMX OUTPUT CONFIG setting to ON in the PERSONALITY menu. After confirming with ENTER, the spotlight emits the entire universe received via DMX.

ATTENTION: Make sure that there is no signal at the DMX input at the same time !!

5.6 Mounting the devices

ATTENTION: Allow a fixture distance of at least 0.5 metres from easily flammable material and the distance between the light emission and the surface to be illuminated must be at least 2.0 meters.

The P9 Beamspot can be placed on the floor or hang on a trussing system. **Also a mounting horizontally to a truss system like in the picture is only allowed if the omega brackets are attached to the outer camlocks. (distance 223.65mm)**

When placing the unit on the floor make sure that it stands on rigid ground, because the air inlets in the base must not be covered with anything!

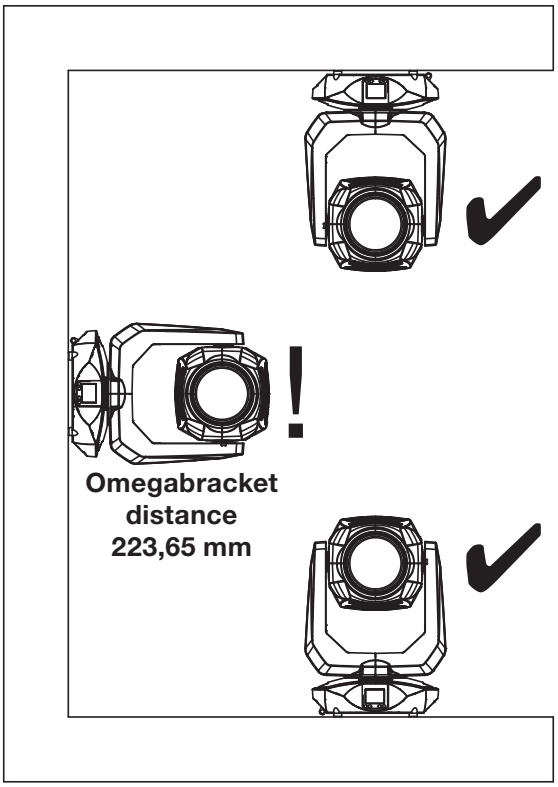

To mount the unit on a trussing system use two of the original JB-Lighting omega brackets with original Camloc-connectors. You have following four possibilities to mount the omega brackets.

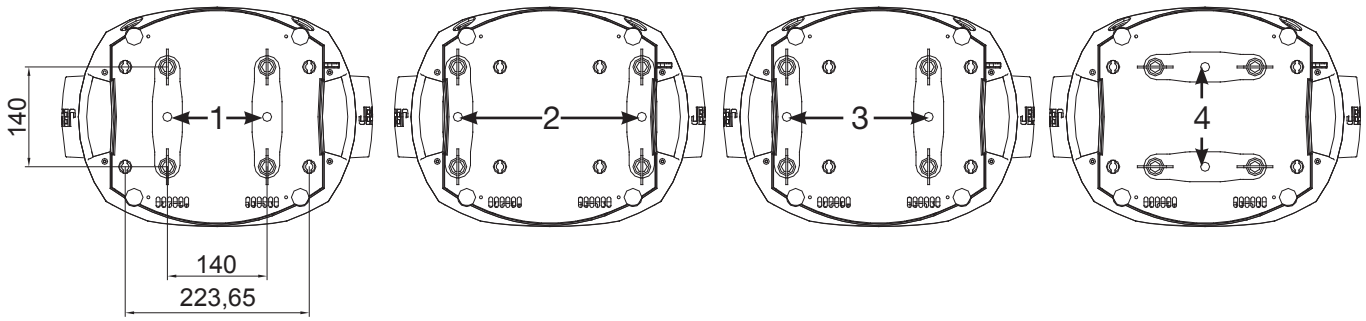

The Camlocs must snap in to be locked properly. Ensure that the structure (for example a truss system) to which you are attaching the fixture is secure. If you install the fixture to a hanging system (for example to a truss system) always attach a safety cable, that can hold at least 10 times the weight of the fixture. There is a corresponding eyelet on the fixture for the secondary safety device (see picture).

6. Control panel

The P9 Beamspot has a graphic colour display that can be rotated 180° when installed in a suspended position. The display can be rotated in the PERSONALITY MENU or via shortcut ENTER + UP in the main screen.

All parameters of the P9 Beamspot can be set on the control panel (see menu overview page 16).

Function and operation of the display

The main menu provides information regarding the set DMX mode and, when the wireless mode is switched on, the field strength of the associated transmitter module. "ENTER" calls up a sub-menu or confirms an input. "ESC" is used to exit a function or a menu item. "UP" and "DOWN" are used to navigate within the menu and to enter values.

Special areas can only be called up using a specific key combination. To do this, press and hold the "ENTER" key and then use the opposite "ESC" key to access the menu. To exit the function, proceed in reverse order.

This applies in the SERVICE area for the FINE ADJUST function and in the STANDALONE area for the MODIFY, RUN and REMOTE functions.

The main menu can also be locked to prevent unintentional access. It is also locked by pressing the "ENTER" key (keep it pressed) and then additionally locking it with the opposite "ESC" key.

Display illumination as function display
The display illumination remains switched off during the reset. Slowly flashing display illumination when "JB-Lighting" is displayed means no DMX signal is present.

A very rapidly flashing display illumination when "JB-Lighting" is displayed means that a new error has been stored in the "ERROR LIST", also an error message in the display (e.g. *PAN TIMEOUT) indicates this current error. This error occurs during this reset or in the operation. This error is now automatically set to "read", but remains in the "ERROR LIST".

A rapidly flashing display illumination shows an error in the "ERROR LIST" is still in it but has already been confirmed or was automatically confirmed. Only when the error has been deleted from the ERROR LIST does the P9 Beamspot start again without error signalling.

If errors occur again and again contact the dealer / distributor or our service department.

If the P9 Beamspot receives a DMX signal, the display illumination goes out after 5 seconds.

Further settings for the display illumination see page 20 BACKLIGHT MODE.

DMX addressing
In the main menu, the DMX address can be set directly by pressing the up/down keys.

Display operation via battery backup
By pressing the left button below the display, the configuration battery operation of the headlamp is activated, so the headlamp can be configured without power. It is possible to configure all the settings displayed by the menu, for example the DMX address can be set.

6.1 Menu overview P9 Beamspot

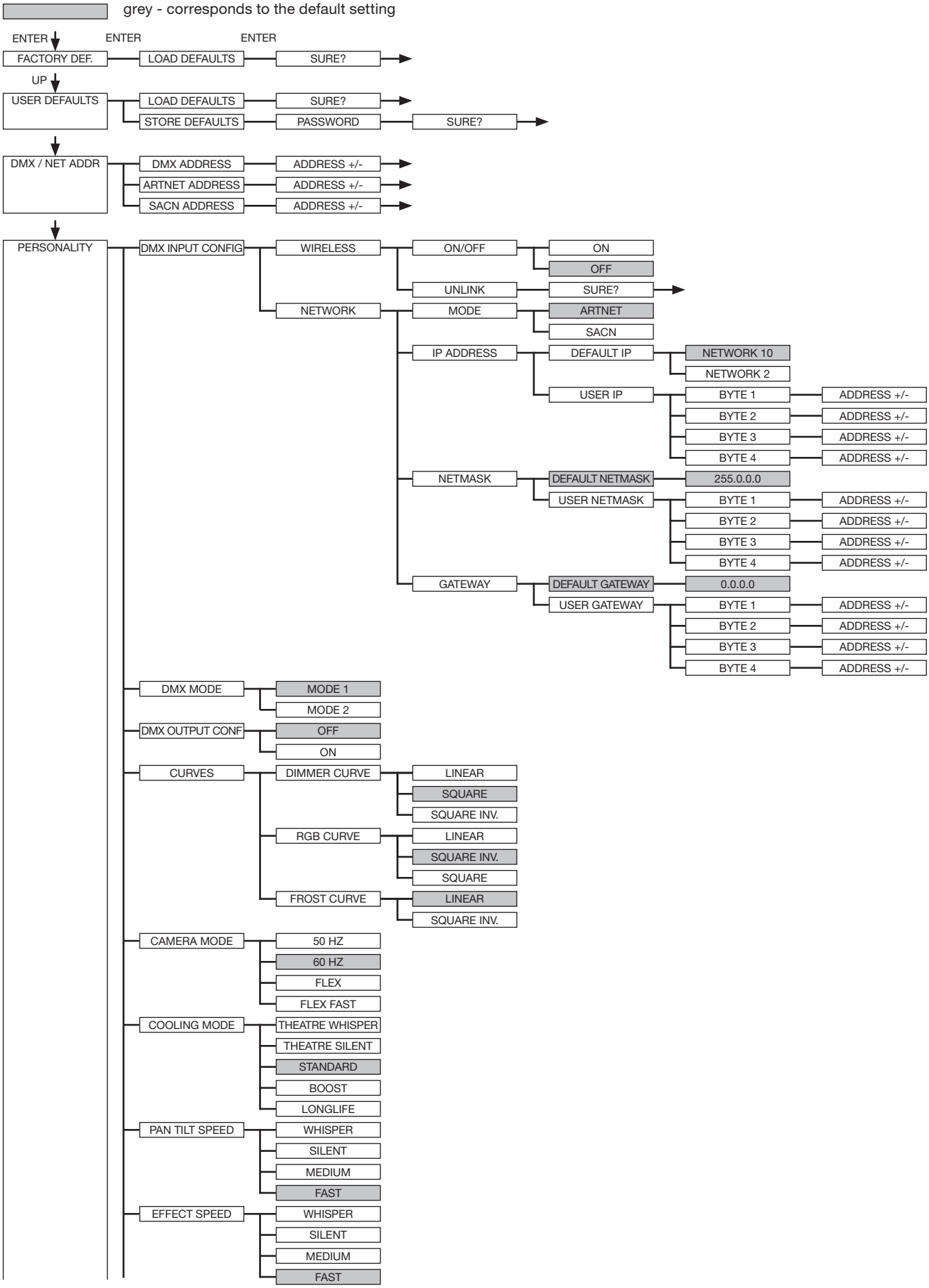

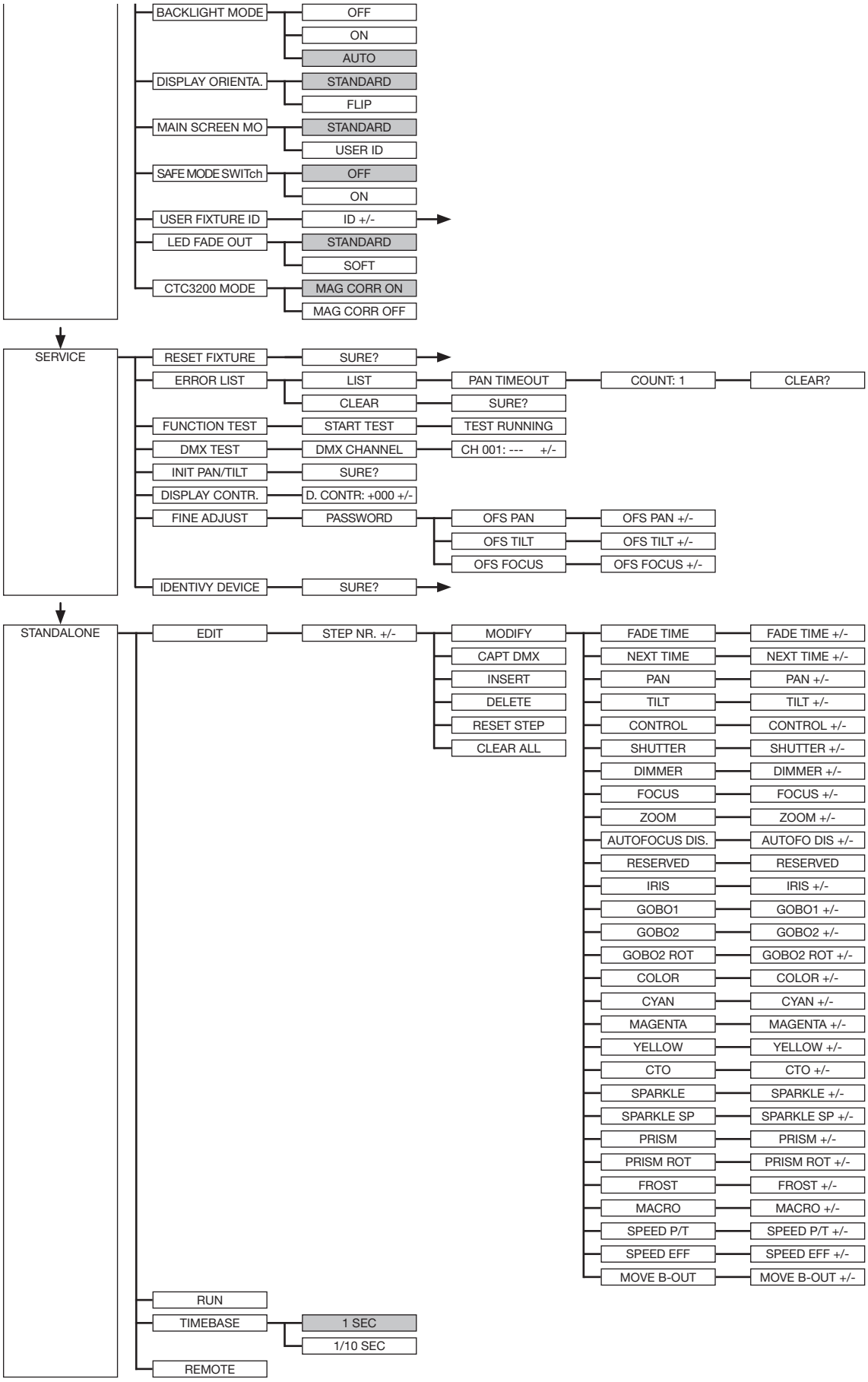
BACKLIGHT MODE
OFF
ON
AUTO
DISPLAY ORIENTA.
STANDARD
FLIP
MAIN SCREEN MO
STANDARD
USER ID
SAFE MODE SWITch
OFF
ON
USER FIXTURE ID
ID +/-
LED FADE OUT
STANDARD
SOFT
CTC3200 MODE
MAG CORR ON
MAG CORR OFF
SERVICE
RESET FIXTURE
SURE?
ERROR LIST
LIST
PAN TIMEOUT
COUNT: 1
CLEAR?
CLEAR
SURE?
FUNCTION TEST
START TEST
TEST RUNNING
DMX TEST
DMX CHANNEL
CH 001: --- +/-
INIT PAN/TILT
SURE?
DISPLAY CONTR.
D. CONTR: +000 +/-
FINE ADJUST
PASSWORD
OFS PAN
OFS PAN +/-
OFS TILT
OFS TILT +/-
OFS FOCUS
OFS FOCUS +/-
IDENTIVY DEVICE
SURE?
STANDALONE
EDIT
STEP NR. +/-
MODIFY
CAPT DMX
INSERT
DELETE
RESET STEP
CLEAR ALL
FADE TIME
FADE TIME +/-
NEXT TIME
NEXT TIME +/-
PAN
PAN +/-
TILT
TILT +/-
CONTROL
CONTROL +/-
SHUTTER
SHUTTER +/-
DIMMER
DIMMER +/-
FOCUS
FOCUS +/-
ZOOM
ZOOM +/-
AUTOFOCUS DIS.
AUTOFO DIS +/-
RESERVED
RESERVED
IRIS
IRIS +/-
GOBO1
GOBO1 +/-
GOBO2
GOBO2 +/-
GOBO2 ROT
GOBO2 ROT +/-
COLOR
COLOR +/-
CYAN
CYAN +/-
MAGENTA
MAGENTA +/-
YELLOW
YELLOW +/-
CTO
CTO +/-
SPARKLE
SPARKLE +/-
SPARKLE SP
SPARKLE SP +/-
PRISM
PRISM +/-
PRISM ROT
PRISM ROT +/-
FROST
FROST +/-
MACRO
MACRO +/-
SPEED P/T
SPEED P/T +/-
SPEED EFF
SPEED EFF +/-
MOVE B-OUT
MOVE B-OUT +/-
RUN
TIMEBASE
1 SEC
1/10 SEC
REMOTE

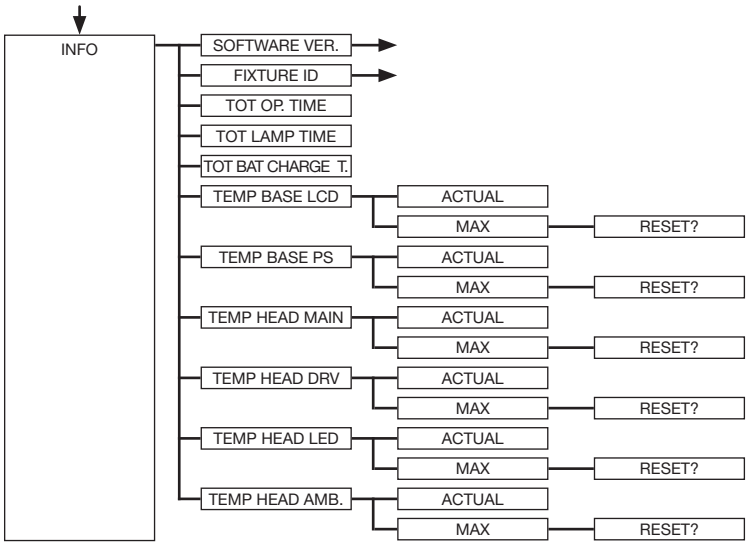

6.2 FACTORY DEFAULTS - Factory settings

To reset P9 Beamspot to the factory settings, go to the menu item FACTORY DEFAULTS, LOAD DEFAULTS. After confirming the security prompt SURE? with pressing “ENTER” for 2 seconds, all parameters are reset to the factory settings.

6.3 USER DEFAULTS - User settings

If the user has set the P9 Beamspot in the PERSONALITY menu to their personal settings, these can be saved and loaded in the USER DEFAULTS menu. In order to prevent unintentional alteration of the data, you must enter the following password during the saving process: Buttons "ESC DOWN UP ENTER".

6.4 DMX / NET ADDRESS - DMX addressing / Artnet addressing / sACN addressing

The DMX addressing can be done either directly in the display. Press the "UP" or "DOWN" button to set the desired DMX address. The value is confirmed with the "ENTER" key. However, the DMX addressing can also be done within the menu item DMX / NET ADDR, and there under DMX ADDRESS.

To set the Artnet address, the menu item ARTNET ADDRESS must be selected in the DMX / NET ADDR menu. The Artnet address can now be set using the UP / DOWN buttons. The Artnet address is displayed in the form 000.00.00. This display corresponds to: Net.Subnet.Universum. The sACN address can then be selected in the DMX / NET ADDR -> sACN ADDRESS menu. The address can now be set using the UP / DOWN buttons. The sACN address is displayed in the form 00000.

6.5 PERSONALITY - Personal settings

DMX INPUT CONFIG

In this menu item the options WIRELESS and NETWORK are available.

Under WIRELESS -> ON / OFF the factory-installed radio DMX receiver module of Lumen-Radio can be activated or deactivated and via WIRELESS -> UNLINK the connection to the connected transmitter can be deleted. In order to connect the fixture to a transmitter, wireless must be set to ON on the fixture and the connection button must be pressed briefly on the transmitter. The transmitter is now looking for all fixtures where wireless is enabled and fixtures that are not connected to a transmitter. If the P9 Beamspot has successfully connected to the transmitter, the display shows a level indication of the current reception quality. If the P9 Beamspot is additionally connected via the DMX / etherCON connection sockets, these signals have priority over the radio link. Using the key shortcut ESC and DOWN, pressed in the main menu, the headlamp can be booked out of the booked transmitter (see page 22).

Under NETWORK -> MODE you can toggle between Artnet operation and sACN operation.

For network operation, the IP address of the spotlight must be selected or set under NETWORK -> IP ADDRESS. Each headlight has a unique standard IP address.

Under IP ADDRESS -> DEFAULT IP this can be changed from the network 10.xxx.xxx.xxx to a network 2.xxx.xxx.xxx. For your own self-definable IP address, you can set your own desired IP address under IP ADDRESS -> USER-IP. This address is divided into BYTE1 to BYTE 4 and can be set one after the other.

DMX MODE - setting the operation mode

The P9 Beamspot has 2 operating modes (see channel assignment for P9 Beamspot on page 24). All parameters of P9 Beamspot can be operated via mode 1. However, all channels (except pan/tilt) are controlled with 8 bits. By selecting Mode 2 - 16 Bit the gobo, prism rotation, CMY/CTO(CTB), dimmer, focus, zoom, the complete shutter slide unit as well as pan/tilt are controlled via 16 Bit.

DMX OUTPUT CONFIG - configuration of the DMX output

Under this menu item, the DMX output of the headlamp can be activated, that is a received Art-net, or wireless DMX signal can be output by activating this menu item -> ON via the DMX socket again. Make sure that there is no signal at the DMX input at the same time !!

CURVES - setting dimmer, RGB/CMY, frost curve

Dimmer curve:

The dimmer curve can be changed from SQUARE to LINEAR and to SQUARE INV.. The “exponential” dimmer curve (factory setting) causes the dimmer to fade in and out more smoothly.

RGB/CMY curve:

3 different curves can be set for the RGB/CMY curve: LINEAR, SQUARE INV. and SQUARE. LINEAR enables the color to be run in linearly. At SQUARE INV. retraction appears optically linear.

Frost curve:

The frost curves can be changed from linear to invers exponential (square inv.). The “invers exponential” frost curve causes the frost to fade in and out more smoothly.

CAMERA MODE - setting the repetition frequency of the LEDs

To avoid flickering during TV recordings, the P9 Beamspot can be adjusted from 50 HZ (PAL, Secam, repetition rate 100Hz) to 60 HZ (NTSC, repetition rate 100Hz) for different camera systems. Flex mode (repetition rate 600Hz is set when using different camera systems or when shooting with mobile phone cameras or similar non-professional cameras. A HighFlex mode is also available. In this mode, the repetition frequencies are set to 3 kHz, which is necessary to ensure smooth movements in dimmed lighting scenes. The factory setting of the P9 Beamspot is 60 Hertz. The changeover is also possible with the light mixing console via the control channel.

COOLING MODE - adjustment of brightness and fan volume

In the COOLING MODE menu item you can set the fan control and the brightness of the P9 Beamspot. The following settings are available.

THEATRE WHISPER: volume 29dB(a). In this mode, the spotlight runs at the same brightness up to an ambient temperature of 40°C. It is not necessary to speed up the fans in this mode.

THEATRE SILENT: from 40°C ambient temperature the spotlight regulates the fans a little up thus remains that the brightness is always the same level.

STANDARD: from an ambient temperature of approx. 36°C the fans run to cool the LED accordingly. The brightness remains constant.

BOOST: Brightness 15000 lm, the fans run a little stronger in this mode, from approx. 40° ambient temperature the fans run again accordingly.

LONGLIFE: the fans run a little stronger in this mode, from approx. 40° ambient temperature the fans run again accordingly. We would recommend this mode for permanent installations, as the LED module runs cooler and thus more “stress-free”.

There is no danger to the life of the device in any mode, as the P9 Beamspot has a temperature safety shutdown. In addition, the LED module is switched off from an ambient temperature of 60°C!

PAN TILT SPEED - setting pan/tilt speed
In the PAN TILT SPEED menu you can set the maximum speed, the acceleration and thus also the movement volume of the P9 Beamspot. The following setting options are available.

WHISPER: The speed of Pan / Tilt is reduced so much that a volume of 29dB (A) is not exceeded.

SILENT: The speed of Pan / Tilt is slightly faster and thus louder as compared to the Whisper setting.

MEDIUM: The acceleration and deceleration ramps are set very soft so that the headlamp brakes softly and starts.

FAST: The acceleration and deceleration ramps are set very hard so that the headlamp moves very fast and directly at maximum speed.

EFFECT SPEED - setting effect speed
In the menu item EFFECT SPEED you can set the maximum speed, the effects and thus also the volume of the effects of the P9 Beamspot. The following setting options are available.

WHISPER: The speed of the effects is reduced so much that a volume of 29dB (A) is not exceeded.

SILENT: The speed of the effects is slightly faster and thus a bit louder than with the Whisper setting.

MEDIUM: The acceleration and deceleration ramps of the effects are set very soft, so that the effects are very soft and thus cause little noise.

FAST: The acceleration and deceleration ramp effects are set to maximum speed. Very fast gobo and color changes are possible!

BACKLIGHT MODE - setting the display backlight
This menu item controls the backlight of the display.
OFF: The backlight of the display is always off. The lighting only switches on when a button is pressed. Errors that are indicated by flashing are not displayed in this mode.
ON: The backlight of the display is always on.
AUTO: The backlight is switched on / off due to the action.

DISPLAY ORIENTATION - setting the display orientation
This menu item turns the display orientation. The display can also be rotated when the shortcut ENTER and UP is pressed in the main screen.

MAIN SCREEN MODE - view of the main screen
With this menu item the display of the main screen can be changed. Either the standard (STANDARD) screen is displayed with DMX address and DMX mode or the USER FIXTURE ID. This ID is used to number the headlights and to display this number in the display.

SAFE MODE SWITCH - setting of the safe mode switch
This setting locks the control channel. "ON" means functions are locked, "OFF" means functions are unlocked. To activate the control channel's functions set SAFE MODE SWITCH to "OFF" , default value is "OFF".
To temporarily enable individual functions of the control channel, the dimmer and shutter must be set to DMX 000 for the COOLING MODE function.
To activate the remaining functions, simply send either DMX 010 (3.92%) or DMX 239 (93.73%) to the shutter channel.

USER FIXTURE ID - adjustment of the user fixture ID
Used to set the USER FIXTURE ID (0-65535). This can be displayed via MAIN SCREEN MODE and serves as an info display of the headlight number.

LED FADE OUT - type of dimming
Used to set how to dim the lower range from 0-5%.
STANDARD: When dimming the headlamp, all LED's dim out at the same time.

SOFT: When the headlamp is dimmed, the LED's are dimmed out in groups (in a row) one row after the other.

CTC3200 MODE - Setting the magenta correction for CTO
MAG CORR ON: some magenta is added to the CTO to get a better 3200K white.
MAG CORR OFF: only the pure CTO is brought in.

6.6 STANDALONE operation

In standalone operation, up to 20 program steps can be stored in the P9 Beamspot, which can then run in an endless loop. The images can be saved in two ways. Either you program the desired DMX values directly on P9 Beamspot and save them, or you set the DMX values via a connected DMX console and then store them in the P9 Beamspot.
The menu items MODIFY, RUN and REMOTE can only be called up using a specific key combination. To do this, press and hold “ENTER”, and also press “ESC”. Before activating these menu items, remove all other devices in the DMX line that send DMX, e.g. consoles or other spotlights that are not configured as slave devices, as otherwise damage to the DMX drivers may occur.

Programming the standalone programme on the spotlight display:
Call up the STANDALONE, EDIT menu item. In the STEP NR+/- menu item, select the desired step and you can change it and its channel parameters in the following menu items: In the MODIFY menu item, set the desired lighting scene and position and determine the individual sequence times of the steps with FADE TIME and NEXT TIME (time for the complete step).
Use INSERT to insert an additional programming step. The DMX values of the previous step are copied to the new step.
Use DELETE to delete a step. The display shows STEP NR: 1/X. Use the selection keys to move to the desired step.
With RESET STEP you reset one step to its default values (DMX 000). The display shows STEP NR: 1/X. Use the selection keys to select your step. CLEAR ALL resets the complete standalone programming steps. Under MODIFY you will find STEP1/1 again. In the STANDALONE, TIMEBASE menu item you have the possibility to change the Fade Time and Next Time from 1 second to 1/10 second.

Accept the DMX values from an external console:
To accept the DMX values of a connected console, you must first enable the Capture DMX input. To do this, go to the CAPT DMX menu item. The display now shows CAPTURE DMX 01/01, press the Enter key to switch to START CAPTURE. Now the P9 Beamspot reacts to the signals from the external console.

Launch the standalone program:
Call up the STANDALONE menu and navigate to the RUN submenu. Confirm the selection by pressing the key combination “ENTER” (press and hold) and simultaneously “ESC”. The display then shows: S-ALONE: 01/XX and the program runs in an endless loop.
Deactivation: Press and hold the “ESC” key and then also press "ENTER". The menu jumps back one level and RUN appears in the display.

Operation via master-slave function:
Connect the P9 Beamspot via DMX lines and activate the REMOTE menu item for all slave devices. To do this, navigate in the STANDALONE menu to the REMOTE sub-menu. Activate the REMOTE function by pressing and holding “ENTER”, and also pressing “ESC”. The spotlight is in slave mode when the display shows the status REMOTE INACTIVE or REMOTE ACTIVE.
REMOTE INACTIVE: The P9 Beamspot is in slave mode but does not receive a DMX signal.
REMOTE ACTIVE: The P9 Beamspot is in slave mode and receives a DMX signal.
The master device is programmed via the MODIFY menu item and started via RUN (press and hold “ENTER” and also press “ESC”).

6.7 INFO-menu

The Info menu informs you about the respective software, the fixture id, about the total operating time and the different temperatures of the spotlight. The first two menu items in the Info area are the software version and the fixture ID, whereby the software version is an important source of information for our service requests, the fixture ID is less important source of internal information. Under the menu item TOT OPERATE TIME the complete operating time of the headlight is displayed. The menu item TOT LAMP TIME provides information about the pure operating time of the LED module. TOT BAT CHARGE TIME shows the complete charging time of the battery (battery backup). The TOT OPERATE TIME and the TOT BAT CHARGE TIME can not be deleted! The following temperatures are also displayed:

TEMP BASE LCD, the temperature on the display board

TEMP BASE PS, the temperature of the power supply unit

TEMP HEAD MAIN, the temperature of the head board

TEMP HEAD DRV, the temperature of the LED driver board

TEMP HEAD LED, the temperature of the LED module

TEMP HEAD AMBIENT, the temperature in the head next to the air inlet (ambient temperature)

Both the current temperature and the maximum temperature are displayed. The maximum temperatures can be individually deleted.

6.8 Shortcuts - quick access

ESC + DOWN
Pressing the ESC and DOWN buttons in the main menu will log the fixture off the programmed Lumen Radio Wireless transmitter. The fixture is now ready to be logged in another transmitter.

ENTER + UP
If ENTER + UP is pressed in the main screen, the screen orientation is rotated by 180 °.

ENTER + ESC
By pressing the ENTER and ESC key, the fixture is locked for user input -> LOCKED. ESC and ENTER release the lock again!

7. Control options

7.1 DMX

7.1.1 Operating modes P9 Beamspot

The P9 Beamspot has 2 different DMX modes. The respective mode can be set in the PERSONALITY, DMX MODE menu item. The set mode is displayed in the main menu.

	Mode 1(M1)	**Mode 2 (M2)**
Channel 1	Pan	Pan
Channel 2	Pan fine	Pan fine
Channel 3	Tilt	Tilt
Channel 4	Tilt fine	Tilt fine
Channel 5	Control channel	Control channel
Channel 6	Shutter	Shutter
Channel 7	Dimmer	Dimmer
Channel 8	Focus	Fine dimmer
Channel 9	Zoom	Focus
Channel 10	Autofocus distance	Fine focus
Channel 11	Reserved	Zoom
Channel 12	Iris	Fine zoom
Channel 13	Gobo 1	Autofocus distance
Channel 14	Gobo 2	Reserved
Channel 15	Gobo 2 rotation	Iris
Channel 16	Colour wheel	Fine iris
Channel 17	Cyan	Gobo 1
Channel 18	Magenta	Gobo 2
Channel 19	Yellow	Gobo 2 rotation
Channel 20	CTO	Gobo 2 fine rotation
Channel 21	Sparkle	Colour wheel
Channel 22	Sparkle speed	Cyan
Channel 23	Prism 1	Fine cyan
Channel 24	Prism 1 rotation	Magenta
Channel 25	Frost 1	Fine magenta
Channel 26	Effect macro	Yellow
Channel 27	Pan/tilt speed	Fine yellow
Channel 28	Effect speed	CTO
Channel 29	Blackout Move	CTO fine
Channel 30		Sparkle
Channel 31		Sparkle speed
Channel 32		Prism 1
Channel 33		Prism 1 rotation
Channel 34		Prism 1 fine rotation
Channel 35		Frost 1
Channel 36		Effects macro
Channel 37		Pan/tilt speed
Channel 38		Effect speed
Channel 39		Blackout Move

7.1.2 DMX channel functions P9 Beamspot

M1	M2	M3	Function	DMX
1	1		**Pan** (X) movement 546,74°	000-255
2	2		**Pan** (X) fine (16 Bit)	000-255
3	3		**Tilt** (Y) movement 281,16°	000-255
4	4		**Tilt** (Y) fine (16 Bit)	000-255
5	5		**Control channel - Attention: The control channel functions are not locked by default. Note the PERSONALITY -> SAVE MODE SWITCH setting!** To enable uniform dimming manually via faders for all light mixing consoles, 5 different settings for the DMX smoothing are available. If the DMX signal is interrupted or too few packets are sent on some DMX consoles, the response of the Sparx 18/30 can be adjusted with this channel. The Minimum DMX Smoothing setting should work on most popular consoles. The values for DMX smoothing must be permanent. For the other values, such as cooling mode, color temperature, zoom modes, camera mode, reset, the values must be applied for 2 seconds, then the device will be permanently switched (Same setting as in the PERSONALITY menu).	
			Setting for minimal DMX smoothing (A dimmed shutter sequence is possible)	
			Dimmer fade out via fader (fast - slow)	000-007
			not used	008-031
			Setting for minimum / medium DMX smoothing	
			Dimmer fade out via fader (fast - slow)	032-039
			not used	040-063
			Setting for medium DMX smoothing	
			Dimmer fade out via fader (fast - slow)	064-071
			not used	072-095
			Setting for medium / maximum DMX smoothing	
			Dimmer fade out via fader (fast - slow)	096-103
			BACKLIGHT MODE - Display backlight configuration	
			AUTO - the fixture controls the backlight automatically	104-104
			ON - the backlight is always on	105-105
			OFF - the backlight is always off until a key is pressed	106-106
			DISPLAY ORIANTATION - display flip or not	
			STANDARD - the display can be read when the headlamp is on a surface	107-107
			FLIP - the display orientation is rotated by 180 °, hanging readable	108-108
			not used	109-109
			MAIN SCREEN MODE - view of the main screen	
			STANDARD - the main screen displays the DMX address, the DMX mode, and when wireless is enabled, the field strength.	110-110
			USER FIXTURE ID - the main screen displays the user definable fixture ID / headlight number	111-111
			not used	112-112
			USER FIXTURE ID SET - Scheinwerfernummer setzen	
			SET - the USER ID can be set. The headlamp takes the 16-bit value of Pan for the USER ID	113-113
			not used	114-127

			Setting for maximum DMX smoothing	
			Dimmer fade out via fader (fast - slow)	128-135
			DIMMER CURVE - selection of dimmer curve	
			LINEAR - linear dimmer curve	136-136
			SQUARE - exponential dimmer curve	137-137
			SQUARE INVERSE - exponential inverse dimmer curve	138-138
			not used	139-139
			RGB/CMY CURVE - selection of RGB/CMY curve	
			SQUARE INVERSE OLD - Exponential inverse old RGB/CMY curve	140-140
			LINEAR - linear RGB/CMY curve	141-141
			SQUARE INVERSE - Exponential inverse RGB/CMY curve	142-142
			FROST CURVE - selection of frost curve	
			LINEAR - linear frost curve	143-143
			SQUARE INVERSE - Exponential inverse frost curve	144-144
			not used	145-145
			PAN/TILT SPEED - selection of PAN/TILT speed	
			WHISPER	146-146
			SILENT	147-147
			MEDIUM	148-148
			FAST	149-149
			EFFECT SPEED - selection of effect speed	
			WHISPER	150-150
			SILENT	151-151
			MEDIUM	152-152
			FAST	153-153
			LED FADE OUT MODE - selection of dimming out	
			STANDARD	154-154
			SOFT	155-155
			not used	156-157
			CTC3200K MODE - setting the magenta correction for CTO	
			MAG CORR ON	158-158
			MAG CORR OFF	159-159
			COOLING MODE - Adjust the fan volume and brightness	
			This takes place with dimmer / shutter set to closed (DMX 000) then after 2 seconds the fixture will switch this option, except the switch "SAFE MODE SWITCH" in the PERSONALITY menu is set to OFF, then the changeover can take place directly without dimmer and shutter having to be closed.	
			THEATRE WHISPER	160-160
			THEATRE SILENT	161-161
			STANDARD	162-162
			BOOST	163-163
			LONGLIFE	164-164
			not used	165-207
			CAMERA MODE - Setting the LED refresh rate	
			50Hz	208-215
			60Hz	216-223
			FLEX - 600Hz	224-227
			High FLEX - 3kHz	228-231
			not used	232-239
			RESET - a basic reset of the fixture is carried out	
			Reset	240-247
			nicht belegt	248-255

6	6		**Shutter** Shutter closed Shutter open Open pulsing shutter >20Hz (rapid - slow) Shutter open Fade effect with dimmer (slow - rapid) Shutter open Shutter closed Open pulsing shutter <20Hz (rapid - slow) Shutter open Close pulsing shutter >20Hz (rapid - slow) Shutter closed Shutter fade, 0% (rapid - slow) Shutter open Shutter fade, 100% (rapid - slow) Shutter closed Random shutter 100% (rapid - slow) Shutter open Random shutter 0% (rapid - slow) Shutter closed Random shutter fade, 0% (rapid- slow) Shutter open Random shutter fade, 100% (rapid- slow) Shutter open	 000-015 016-095 096-110 111-111 112-125 126-126 127-126 128-142 143-143 144-158 159-159 160-174 175-175 176-190 191-191 192-206 207-207 208-222 223-223 224-238 239-239 240-254 255-255
7	7		**Dimmer** 0 - 100%	000-255
	8		**Dimmer fine** (16Bit)	000
8	9		**Focus** 0-100%	000-255
	10		**Focus fine** (16 Bit)	000-255
9	11		**Zoom** 0 -100% (near 3.4° - far 54°)	000-255
	12		**Zoom fine** (16 Bit)	000-255
10	13		**Auto focus distance** Auto focus off Auto focus 0 m - 25,5 m (0 =off, DMX / 10 = distance)	 000-001 002-255
11	14		**Reserved** (no function)	000-255
12	15		**Iris** 0-100% (open -> closed)	000-255
	16		**Iris fine** (16Bit)	000-255
13	17		**Gobo wheel 1** Gobo 0 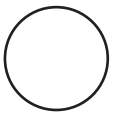 Gobo 1 	 000-007 008-015

			Gobo 2		016-023
			Gobo 3	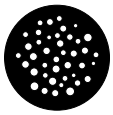	024-031
			Gobo 4		032-039
			Gobo 5		040-047
			Gobo 6		048-055
			Gobo 7	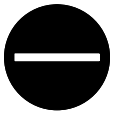	056-063
			Gobo 8		064-071
			Gobo 9	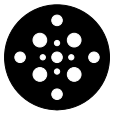	072-079
			Gobo 10		080-087
			Gobo 11		088-191
			Gobo wheel rotation (fast - slow) Gobo wheel rotation (fast - slow)		192-223 224-255
14	18		**Gobo wheel 2 - rotating gobos**		
			Gobo 0	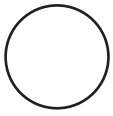	000-007
			Gobo 1		008-015
			Gobo 2		016-023
			Gobo 3	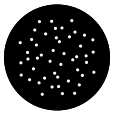	024-031

			Gobo 4	032-039
			Gobo 5	040-047
			Gobo 6	048-055
			Gobo 7	056-127
			Gobo 0 shake (fast - slow)	128-135
			Gobo 1 shake (fast - slow)	136-143
			Gobo 2 shake (fast - slow)	144-151
			Gobo 3 shake (fast - slow)	152-159
			Gobo 4 shake (fast - slow)	160-167
			Gobo 5 shake (fast - slow)	168-175
			Gobo 6 shake (fast - slow)	176-183
			Gobo 7 shake (fast - slow)	184-191
			Gobo wheel rotation (fast - slow)	192-223
			Gobo wheel rotation (fast - slow)	224-255
15	19		**Gobo positioning/rotation 2**	
			Gobo positioning 0° - 540°	000-191
			Gobo rotation, right (rapid - slow)	192-222
			Stop gobo rotation	223-224
			Gobo rotation, left (slow - rapid)	225-255
	20		**Gobo positioning/rotation 2 fine** (16 Bit)	000-255
16	21		**Color wheel**	
			White (color shift gobo on)	000-000
			White (color shift gobo off)	001-001
			White / CTB	002-003
			CTB	004-005
			CTB / Red	006-007
			Red	008-009
			Red / Yellow	010-011
			Yellow	012-013
			Yellow / Magenta	014-015
			Magenta	016-017
			Magenta / Green	018-019
			Green	020-021
			Green / Orange	022-023
			Orange	024-025
			Orange / Blue	026-027
			Blue	028-029
			Blue / Pink	030-031
			Pink	032-033
			Pink / CRI	034-035
			CRI	036-037
			CRI / CTO	038-039
			CTO	040-063

			Linear colours: White - CTB - Red - Yellow - Magenta - Green - Orange - Blue - Pink - CRI - CTO - White Colour cycle, right (rapid - slow) Colour cycle, left (slow - rapid)	064-191 192-223 224-255
17	22		**Cyan** (8 Bit) 0-100%	000-255
	23		**Fine cyan** (16 Bit)	000-255
18	24		**Magenta** (8 Bit) 0-100%	000-255
	25		**Fine magenta** (16 Bit)	000-255
19	26		**Yellow** (8 Bit) 0-100%	000-255
	27		**Fine yellow** (16 Bit)	000-255
20	28		**CTO** (8 Bit) 0-100% model HP, HC / **CTB** (8 Bit) 0-100% model WW	000-255
	29		**CTO fine** (16 Bit) **/ CTB fine** (16 Bit) model WW	000-255
21	30		**Sparkle - Glitter effect** Sparkle effect inactive Sparkle effect intensity (minimum - maximum)	 000-000 001-255
22	31		**Sparkle speed** Faded sparkle effect (slow -> rapid) Switched sparkle effect (slow -> rapid) Repetition of the fading and switching blocks	 000-031 032-063 064-255
23	32		**Prism 1** Open Prism 1 (3-facet circular)	 000-007 008-255
24	33		**Prism 1 positioning/rotation** Prism positioning (0° - 540°) Prism rotation, right (rapid -> slow) Stop prism rotation Prism rotation, left (slow -> rapid)	 000-191 192-222 223-224 225-255
	34		**Prism 1 fine positioning/rotation** (16 Bit)	000-255
25	35		**Frost 1** Frost 0-100%	 000-255
26	36		**Effects macro** Macro inactive Macro 001 - Macro 255	 000-000 001-255
27	37		**Pan/tilt speed** Real-time motion Delayed motion (rapid - slow)	 000-003 004-255
28	38		**Effects speed** Real-time effects Delayed effects (rapid - slow)	 000-003 004-255

29	39		**Blackout Move**	
			Not assigned	000-095
			Blackout during pan/tilt	096-127
			Blackout during Gobo, Colour, Prism, CMY, Iris, Frost	128-159
			Blackout during Gobo, Colour, Prism, CMY, Iris, Frost, Zoom, Focus	160-191
			Blackout during Gobo, Colour, Prism, CMY, Iris, Frost, Pan/Tilt	192-223
			Blackout during Gobo, Colour, Prism, CMY, Iris, Frost, Zoom, Focus, Pan/Tilt	224-255

7.1.3 Control channel

Via the control channel different functions of the fixture can be switched. The following functions can be switched via the control channel.
Response of the headlamp when dimming via faders
BACKLIGHT MODE - display backlight
DISPLAY ORIENTATION - display orientation
MAIN SCREEN MODE - main screen view
USER FIXTURE ID SET - set headlight number
DIMMER CURVE - dimmer curve adjustment
FROST CURVE - setting the frost curve
PAN / TILT SPEED - pan / tilt speed
EFFECT SPEED - effect speed
LED FADE OUT MODE - type of dimming
CTC3200 MODE - setting the magenta correction for CTO
COOLING MODE - adjust the fan volume and brightness
CAMERA MODE - sets the LED refresh rate
RESET - a basic reset of the headlight is performed

For details, see DMX channel functions for the P9 Beamspot on page 24.

7.1.4 Sparkle effect, sparkle speed

Animation effects can be created via this channel in connection with the focus. Depending on the intensity, the projection can be made to shake more or less. This effect can be dimmed or switched.

7.1.5 Auto focus

To activate the autofocus function, set the autofocus distance channel to around 50%. Then best use gobo wheel 2 for fine adjustment of the system and set the focus accordingly to 125 (32000): Then set the distance to the headlight by focusing the headlight using the autofocus distance. As a guideline, DMX value divided by 10 corresponds to the distance (DMX 100/10 distance = 10m). Now the headlight can be operated with autofocus via the zoom. Using the following table, the focus values for the individual effects can now be preselected and zoomed in with autofocus.

	Gobo1	Gobo2 Open	Iris
Focus 8Bit	95	125	215
Focus 16Bit	24320	32000	55040

7.2 Artnet

The spotlight can be controlled via Artnet - ArtNET 4. To do this, set the Artnet address via the menu item DMX / NET ADDR -> ARTNET ADDRESS and also select it via the menu item PERSONALITY -> DMX INPUT CONFIG -> NETWORK -> MODE -> ARTNET. In addition, define the IP address of the spotlight via PERSONALITY -> DMX INPUT CONFIG -> NETWORK -> IP ADDRESS. Further details and setting options can be found on page 18

7.3 Streaming ACN

The headlight can be controlled via sACN - Streaming ACN. To do this, set the sACN address via the menu item DMX / NET ADDR -> SACN ADDRESS and also select it via the menu item PERSONALITY -> DMX INPUT CONFIG -> NETWORK -> MODE -> SACN. In addition, define the IP address of the spotlight via PERSONALITY -> DMX INPUT CONFIG -> NETWORK -> IP ADDRESS. Further details and setting options can be found on page 18

7.4 Wireless-DMX

The P9 Beamspot is equipped with a Lumen Radio CRMX receiver for wireless DMX. The receiver can process both DMX and RDM. If there is a cable and wireless connection to the P9 Beamspot, the cable connection has priority! The received signal can be output via the DMX connection. To do this, set the DMX OUTPUT CONFIG setting to ON in the PERSONALITY menu. After confirming with ENTER, the spotlight will output the entire universe received via wireless DMX.

7.5 RDM

The P9 Beamspot can communicate via RDM (Remote Device Management) in accordance with ESTA American National Standard E1.20-2006. RDM is a bidirectional communication protocol for use in DMX512 control systems. It is the open standard for the configuration and status monitoring of DMX-512 devices. The RDM protocol enables data packets to be inserted into a DMX-512 data stream without affecting existing non-RDM devices. It enables a console or dedicated RDM controller to send commands to specific devices and receive messages. The P18 can send and receive RDM via DMX and Artnet 4. The spotlight is also designed to send RDM via sACN and receive it via Artnet. The RDM functionality depends on the lighting control desk used, the operating instructions of the respective desk manufacturer must also be observed.

7.5.1 RDM-UID

Every P9 Beamspot has a factory-set RDM-UID (unique identification number), which makes it addressable and identifiable in RDM systems.

7.5.2 RDM-PIDs

The P9 Beamspot supports the RDM PIDs (parameter IDs) required by ESTA as well as manufacturer-specific PIDs.

7.5.3 Standard RDM parameter IDs

RDM parameter ID	GET	SET	DISCO-VERY	Note
RDM identification				
DISC_UNIQUE_BRANCH			✔	is used for fixture identification
DISC_MUTE			✔	is used for fixture identification
DISC_UN_MUTE			✔	is used for fixture identification
RDM status determination				
QUEUED_MESSAGE	✔			
STATUS_MESSAGES	✔			
STATUS_ID_DESCRIPTION	✔			
CLEAR_STATUS_ID		✔		
RDM information				
SUPPORTED_PARAMETERS	✔			
RDM configuration				
DEVICE_MODEL_DESCRIPTION	✔			
MANUFACTURER_LABEL	✔			
FACTORY_DEFAULTS		✔		
SOFTWARE_VERSION_LABEL	✔			
DMX_PERSONALITY		✔		
DMX_PERSONALITY_DESCRIPTION	✔			
DMX_START_ADDRESS		✔		
SENSOR_DEFINITION	✔			
DEVICE_HOURS	✔			
LAMP_HOURS	✔			
IDENTIFY_DEVICE		✔		
RESET_DEVICE		✔		
PERFORM_SELFTEST		✔		
SELFTEST_DESCRIPTION	✔			

7.5.4 Manufacturer specific RDM parameter IDs

RDM parameter ID	GET	SET	DISCO-VERY	Note
RDM configuration				
Battery Charge Hours	✔			
Error Number	✔			
Error	✔			
Select Next Error		✔		
Remove Error		✔		
Remove New Error Flag		✔		
User Defaults		✔		
User Fixture ID		✔		
Fixture Lock On/Off	✔	✔		
Dimmer Curve	✔	✔		
RGB Curve	✔	✔		
Frost Curve	✔	✔		
Camera Mode	✔	✔		
Cooling Mode	✔	✔		

Pan Tilt Speed	✔	✔		
Effect Speed	✔	✔		
Backlight Mode	✔	✔		
Disp Orientation	✔	✔		
Main Screen Mode	✔	✔		
Safe Mode Switch	✔	✔		
LED Fade Out Mode	✔	✔		
CTC3200 Mode	✔	✔		

7.5.5 RDM sensor IDs

RDM sensor ID	GET	SET	DISCO-VERY	Note
RDM sensors				
Temp Sens Base LCD	✔	✔		
Temp Sens Base PS	✔	✔		
Temp Sens Head PCB	✔	✔		
Temp Sens Head Drv	✔	✔		
Temp Sens Head LED	✔	✔		
Temp Sens Head Air	✔	✔		

8. Service

8.1 Service menu

RESET FIXTURE

Upon the “Reset” command, P9 Beamspot will initialise to its initial values. It is the same procedure as after switching on the P9 Beamspot. If an error message appears in the display, this could be the first step to correct it.

ERROR LIST

The P9 Beamspot stores all occurring errors internally. An error message can have a harmless cause. If you experience frequent error messages, please contact your dealer or the JB-Lighting service department. All error messages are displayed with the respective frequency and can be deleted.

FUNCTION TEST

This function allows you to test all functions of the P9 Beamspot without using a light mixer. The pan/tilt reset is deactivated in the process.

DMX TEST

This menu item is used to test the DMX input. Use the function keys to select the DMX channel to be tested. The display shows the incoming value, at the same time the P9 Beamspot reacts accordingly.

INIT PAN TILT

The P9 Beamspot is calibrated in the pan/tilt position at the factory. If it loses this calibration, i.e. it strikes against the stop or no longer finds its position, it can be re-initialised using this function. This process takes about 3-4 minutes and ends with a reset of the spotlight.

DISPLAY CONTRAST

The contrast of the LCD display may change when the temperature is too high. In this menu item the contrast can be adjusted.

FINE ADJUST
The FINE ADJUST area is protected by a key combination. Focus, pan and tilt are calibrated at the factory. If there are large deviations in the calibration between the individual headlights, this can be corrected in the FINE ADJUST menu. For more information please contact our service.

IDENTIFY DEVICE
The RDM command IDENTIFY DEVICE can be called up or deactivated via this menu item.

8.2 Changing gobos

ATTENTION: Allow the device to cool down and disconnect the device from the mains before opening the device. Touching live parts (high voltage) can give you an electric shock.

To open the device (from the right side) place the spotlight on a firm base as shown in the picture, the display (1) facing you, the tilt lock (2) is on the right side and the spotlight head facing away from you (3) (Or look through the grille into the spotlight from behind and find a closed honeycomb showing the cover to be opened).
To lift off the cover, open the four camlocks by half a turn, lift off the cover and unhook the safety lanyard. Now open the two knurled screws (4) and remove the gobo insert. The following figure (1) shows the gobo insert of the P9 Beamspot. Check that the focus is moved direction to the front lense

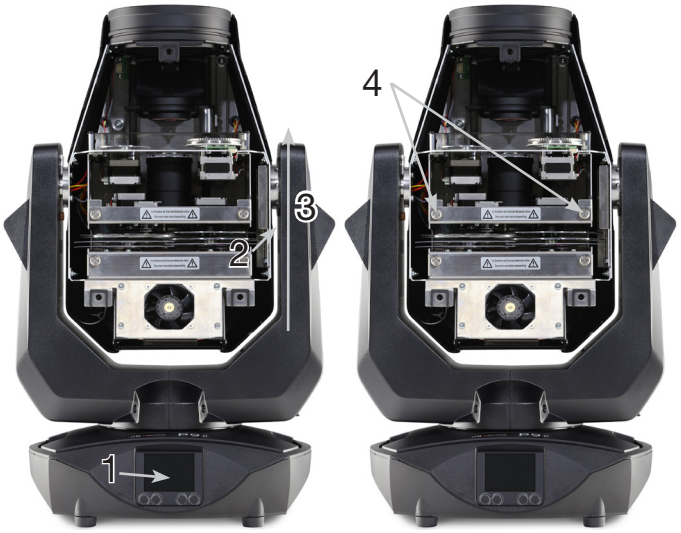

(1)

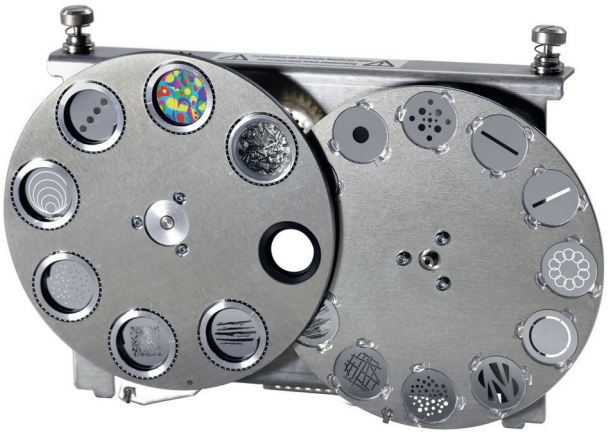

(2)

To change the rotating gobos remove only the clamping ring (A) with a pointed object replace the gobo and then put the clamping ring again. When installing glass gobos, make sure the white coated side faces the front lens. Gobos that are not allowed to twist, e.g. Logos are additionally recommended to be secured against twisting with a drop of silicone adhesive.

When inserting original gobos, pay attention to the markings on the gobo, the gobo holder and the gobo wheel!

8.3 Gobo size

If you want to have your own gobos produced, please note the following dimensions:

Usable diameter, rotating gobowheel 1: 15.00 mm
Usable diameter, rotating gobowheel 2: 16.00mm
Outer diameter: 19.90 mm (+0/-0.1 mm)
Maximum thickness: 1.1 mm

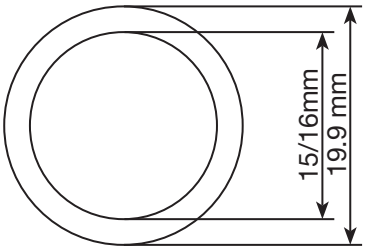

8.4 Software update

The P9 Beamspot can be updated via a USB stick with micro-USB connection. To do this, copy the file directly into the root directory of the USB stick. Then press and hold the right key below the display, switch on the power of the P9 Beamspot as soon as the message “Insert USB stick” appears on the display release the key. Now plug in the USB stick on the back of the device below the signal connections and follow the instructions on the display. The P9 Beamspot completes the software update with a reset. You will find the latest software on our homepage.

8.5 Testing of electrical equipment

According to the German Social Accident Insurance (DGUV) Regulation 3 / Regulation 4, electrical systems and equipment must be subjected to regular inspections. The fixing screw of the DMX 5-pin socket can be used as measuring point for insulation and residual current measurement. The screw is connected to all sheet metal parts via a contact washer.

8.6 Cleaning the device

ATTENTION: Allow the device to cool down and disconnect the device from the mains before opening the device. Touching live parts (high voltage) can give you an electric shock.

You should check the function of the fans in the head and foot at regular intervals. Above all, you should make sure that the air inlets and the inside of the P9 Beamspot are free of fluff and dust. Also make sure that the dust filters in the covers are clean.

Please note that different covers are available. The cover on the insertion side has an additional light shield and may only be mounted on the insertion side (see image). The cover on the rear (circuit board side) does not have a light shield; this may only be mounted on the circuit board side.

Open the head cover (3x camlocks with a half turn) and the bottom plate on the foot. You can clean the P9 Beamspot with a brush and a vacuum cleaner. Also vacuum the dust protection mats in the lids. If the dust protection mats are no longer clean, they must be replaced. In addition, you can remove the gobo insert (1) and the shutter slide insert (2) by loosening the knurled screws (3) and sliding the focus carriage towards the lens. Then you can clean the colour filters, glass gobos and CMY panes with a soft cloth and a little window cleaner. To clean the frost flaps, prisms and zoom/focus unit, remove the four Phillips screws (4) and then the cover. Ensure that you do not bend or damage any parts during cleaning. When cleaning is complete, reconnect the flap, replace the Phillips screws (4) and return the inserts to the unit.

8.7 Service and maintenance

8.7.1 Inspection of lubricated moving parts

On the P9 Beamspot, the zoom / focus guide rails and the rotating gobos should be checked for sufficient lubrication at regular intervals - once a year. To do this, open the head cover (4x camlocks with half a turn), the zoom cover (3 Phillips screws) see (4) and remove the gobo insert (2 knurled screws).

Please note that the rotating gobos and the guide rails do not run dry; if necessary, the rotating gobos must be oiled with a special syringe and the guide rails with a brush with our special silicone oil.

After the gobos and the rails have been checked or oiled, reinsert the slot and close the zoom cover again. After completing the work, replace the head cover on the headlight and test all the functions of the headlight.

8.7.1 Checking the plastic parts

The plastic parts of the P9 Beamspot should be checked regularly for damage and the onset of cracks. If a plastic part is cracked, do not use this fixture until the damaged part is replaced. Cracks or other damage to the plastic parts can be caused by transport or manipulation by third parties, as well as the aging process can affect plastic materials.
This check is required for both permanent installations and when preparing rental equipment. All damaged plastic parts must be replaced immediately! Defective plastic parts can also lead to further damage in the headlight.

9. Overview of error codes for all fixtures

PAN TIMEOUT	Pan	
TILT TIMEOUT	Tilt	
GOBO1 TIMEOUT	Gobo wheel 1 position	
GROT1 TIMEOUT	Gobo wheel 1 rotation	
GOBO2 TIMEOUT	Gobo wheel 2 position	
GROT2 TIMEOUT	Gobo wheel 2 rotation	
COLOR TIMEOUT	Color wheel	
CYAN TIMEOUT	Cyan	
MAGENT TIMEOUT	Magenta	
YELLOW TIMEOUT	Yellow	
CTC TIMEOUT	CTB / CTO	
IRIS TIMEOUT	Iris	
BLADEROT TIMEOUT	Blades Rotation	
BLADE1A TIMEOUT	Blade1A	
BLADE1B TIMEOUT	Blade1B	
BLADE2A TIMEOUT	Blade2A	
BLADE2B TIMEOUT	Blade2B	
BLADE3A TIMEOUT	Blade3A	
BLADE3B TIMEOUT	Blade3B	
BLADE4A TIMEOUT	Blade4A	
BLADE4B TIMEOUT	Blade4B	
ZOOM TIMEOUT	Zoom	
FOCUS TIMEOUT	Focus	
PRISM1 TIMEOUT	Prism 1 (linear)	
PRISM1ROT TIMEOUT	Prism 1 rotation	
PRISM2 TIMEOUT	Prism 2 (circular)	
PRISM2ROT TIMEOUT	Prism 2 rotation	
ANI TIMEOUT	Animation wheel	
ANIROT TIMEOUT	Animation wheel rotation	

FAN B1 ER	Error Fan Base 1	
FAN B2 ER	Error Fan Base 2	
FAN B3 ER	Error Fan Base Transformer	SPARX ONLY
FAN H1 ER	Error Fan Head 1	
FAN H2 ER	Error Fan Head 2	
FAN H3 ER	Error Fan Head 3	
FAN H4 ER	Error Fan Head 4	
FAN H5 ER	Error Fan Head 5	
FAN H6 ER	Error Fan Head 6	
FAN H7 ER	Fan Blades (P18) / CMY P12	
TSENS BPS ER	Sensor Error Base Power Supply AC/DC	
TSENS BLCD ER	Sensor Error Base LCD	
TSENS BAIR ER	Sensor Error Base Air	SPARX ONLY
TSENS HMAIN ER	Sensor Error Head Main PCB	
TSENS HDRV ER	Sensor Error Head LED Driver PCB	
TSENS HLED ER	Sensor Error Head LED	
TSENS HAIR ER	Sensor Error Head Air (Ambient)	
HIGH TEMP BLCD	High Temperature Base LCD PCB	
HIGH TEMP BAIR	High Temperatur Base Air (SPARX ONLY)	
HIGH TEMP BPS	High Temperature Base PSU AC/DC	
HIGH TEMP HMAIN	High Temperature Head Main PCB	
HIGH TMP HDRV	High Temperature Head LED Driver PCB	
HIGH TMP H LED	High Tempperature Head LED Module	
HIGH TEMP HEAD AIR	High Temperature Head Air (Ambient)	
CPU1 NOT RESPONDING	CPU Display PCB	
CPU2 NOT RESPONDING	CPU Pan/Tilt PCB	
CPU3 NOT RESPONDING	CPU Main Head PCB	
CPU4 NOT RESPONDING	CPU Main Head PCB: MK2 MAIN HEAD, P12 CMY, MK1 BLADES	
CPU5 NOT RESPONDING	CPU Blades PCB: MK1 LED DRIVER PCB	
CPU6 NOT RESPONDING	CPU LED Driver PCB: MK1 N.A.	

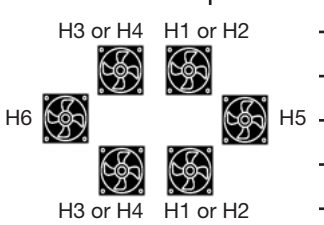

10. Specifications

Dimensions and weight

Length	265 mm
Width	398 mm
Height	609 mm
Net weight	17 kg

Electronic system

Mains connection	100-240 V AC, 50-60Hz
Maximum power consumption	460 VA
Power consumption in standby	100 VA

Temperature

Maximum ambient temperature	45 °C
Minimum ambient temperature	0 °C

Optics, Photometric Data

Light source	White light LED module 330W
Luminous intensity HP	25000 Lumen @ 20°C

Effects

Pan	546.74°
Tilt	281.16°
Zoom	3.4° - 54°

Construction

Colour	black
Housing	PC ABS
Protection class	IP 20
Plug-in technology	yes

Installation

Installation site	indoors
Holder	2x Omega brackets
Position	any
Minimum fixture distance to flammable objects	0.5 m
Minimum distance between the light emission and the surface to be illuminated	2,0 m

Connections

Power input	Neutrik powerCON TRUE1
Power feed-through	Neutrik powerCON TRUE1
DMX/RDM in/out USITT DMX512	5-pin, in/out XLR
Ethernet in/out	Neutrik etherCON
Micro-USB	Software update

11. Declaration of Conformity

CE

Declaration of Conformity

in the sense of the Directive: 2014/35/EU Low Voltage Directive,
(Directive 2014/35/EU of the European Parliament and of the Council of 26/02/2014 to approximate the laws of the Member States relating to electrical equipment designed for use within certain voltage limits)

in the sense of the Directive: 2014/30/EU Electromagnetic compatibility
(Directive 2014/30/EU of the European Parliament and of the Council of 26/02/2014 to approximate the laws of the Member States relating to electromagnetic compatibility)

The manufacturer, **JB-Lighting Lichtanlagentechnik GmbH**
Sallersteigweg 15
89134 Blaustein-Wippingen

declares that the product: **P9**

complies with the essential protection requirements of the directives. The following standards were used for conformity assessment:

Emissions requirements per EN 55032:2015	**Information technology equipment, radio interference characteristics - Limit values and measuring methods - Limit value class A**
Conducted interference emission EN 55032:2015	requirements for information technology equipment, radio interference characteristics - Limit values and measuring methods - Limit value class A
Radiation EN 55032:2015	Information technology equipment, radio interference characteristics - Limit values and measuring methods - Limit value class A
Harmonic currents EN 61000-3-2:2015	Electromagnetic compatibility Part 3-2: Limits, testing of harmonic currents (for devices with an input current < 16A per phase)
Flicker EN 61000-3-3:2013	Electromagnetic compatibility (EMC) Part 3-3: Limits, limitation of voltage changes, Voltage fluctuations and flicker in low-voltage networks (for devices with an input current < 16A per phase)
Immunity - requirements per EN 61000-6-2:2005	**Electromagnetic compatibility (EMC) - Part 6-2: Generic standard - Immunity in industrial areas**
EN 61000-4-2:2009	Part 4-2: Immunity to static electricity discharge
EN 61000-4-3:2006 +A1:2008 +A2:2010	Part 4-3: Immunity to high-frequency electromagnetic fields
EN 61000-4-4:2012	Part 4-4: Immunity against fast transient electrical disturbances (burst)
EN 61000-4-5:2006	Part 4-5: Interference voltages against surge voltages
EN 61000-4-6:2014	Part 4-6: Immunity to conducted disturbances, induced by HF
EN 61000-4-8:2010	Part 4-8: Immunity to magnetic fields with power technology frequencies
EN 61000-4-11:2004	Part 4-11: Immunity against voltage dips, short-term interruptions and voltage fluctuations

Blaustein, 01/09/2021

Jürgen Braungardt
CEO

JB-Lighting Lichtanlagentechnik GmbH
Sallersteig 15
89134 Blaustein
Tel. +49 7304 9617-0
Fax. +49 7304 9617-99
info@jb-lighting.de
www.jb-lighting.de

JB LIGHTING