ENTTEC

DIN RDS4

72004

User Manual

4-way DMX/RDM splitter in compact 4-module DIN-rail form factor.

Content

Safety 3
- Electrical safety 3
- System Planning and Specification 3
- Protection from Injury During Installation 4
- Installation Safety Guidelines 4

Physical Dimensions 5
Mounting Options 5
Wiring Diagrams 6
Functional features 7
- 1>4 Splitter 7
- RDM (ANSI E1.20) 7

Hardware features 7
- LED status indicator 7

Out of the Box 7
Screw Terminal Connectors 7
Servicing, Inspection & Maintenance 8
- Cleaning 8

Package Contents 9
Ordering Information 9

Safety

Ensure you are familiarized with all key information within this guide and other relevant ENTTEC documentation before specifying, installing, or operating an ENTTEC device. If you are in any doubt about system safety, or you plan to install ENTTEC device in a configuration that is not covered within this guide, contact ENTTEC or your ENTTEC supplier for assistance.

ENTTEC's return to base warranty for this product does not cover damage caused by inappropriate use, application, or modification to the product.

Electrical safety

- This product must be installed in accordance with applicable national and local electrical and construction codes by a person familiar with the construction and operation of the product and the hazards involved. Failure to comply with the following installation instructions may result in death or serious injury.
- Do not exceed the ratings and limitations defined in the product datasheet or this document. Exceeding can cause damage to the device, risk of fire and electrical faults.
- Ensure that no part of the installation is or can be connected to power until all connections and work is complete.
- Before applying power to your installation, ensure your installation follows the guidance within this document. Including checking that all power distribution equipment and cables are in perfect condition and rated for the current requirements of all connected devices and factor in overhead and verify that it is appropriately fused and voltage is compatible.
- Remove power from your installation immediately if accessories power cables or connectors is in any way damaged, defective, shows signs of overheating or are wet.
- Provide a means of locking out power to your installation for system servicing, cleaning and maintenance. Remove power from this product when it is not in use.
- Ensure your installation is protected from short circuits and overcurrent. Loose wires around this device whilst in operation, this could result in short circuiting.
- Do not over stretch cabling to the device's connectors and ensure that cabling does not exert force on the PCB.
- Do not 'hot swap' or 'hot plug' power to the device or its accessories.
- Do not connect any of this devices V- (GND) connectors to earth.
- Do not connect this device to a dimmer pack or mains electricity.

System Planning and Specification

- To contribute to an optimal operating temperature, where possible keep this device out of direct sunlight.
- Any twisted pair, 120ohm, shielded EIA-485 cable is suitable to transmit DMX512 data to or from the DIN RDS4. The DMX cable should be suitable for EIA-485 (RS-485) with one or more low capacitance twisted pairs, with overall braid and foil shielding. Conductors should be 24 AWG (7/0.2) or larger for mechanical strength and to minimize volt drop on long lines.
- A maximum of 32 devices should be used on a DMX line before re-generating the signal using a DMX buffer/ repeater / splitter.
- Always terminate DMX chains using a 120Ohm resistor to stop signal degradation or data bounce-back.
- The maximum recommended DMX cable run is 300m (984ft). ENTTEC advises against running data cabling close to sources of electromagnetic interference (EMF) i.e., mains power cabling / air conditioning units.

- This device has an IP20 rating and is not designed to be exposed to moisture or condensing humidity.
- Ensure this device is operated within the specified ranges within its product datasheet.

Protection from Injury During Installation

- Installation of this product must be performed by qualified personnel. If ever unsure always consult a professional.
- Always work with a plan of the installation that respects all system limitations as defined within this guide and product datasheet.
- Keep the DIN RDS4 and its accessories in its protective packaging until final installation.
- Note the serial number of each DIN RDS4 and add it to your layout plan for future reference when servicing.
- Always use suitable personal protective equipment when installing ENTTEC products.
- Once installation is completed, check that all hardware and components are securely in place and fastened to supporting structures if applicable.

Installation Safety Guidelines

- The device is convection cooled, ensure it receives sufficient airflow so heat can be dissipated.
- Do not cover the device with insulating material of any kind.
- Do not operate the device if the ambient temperature exceeds that stated in the device specifications.
- Do not cover or enclose the device without a suitable and proven method of dissipating heat.
- Do not install the device in damp or wet environments.
- Do not modify the device hardware in any way.
- Do not use the device if you see any signs of damage.
- Do not handle the device in an energized state.
- Do not crush or clamp the device during installation.
- Do not sign off a system without ensuring all cabling to the device and accessories has been appropriately restrained, secured and is not under tension.

Physical Dimensions

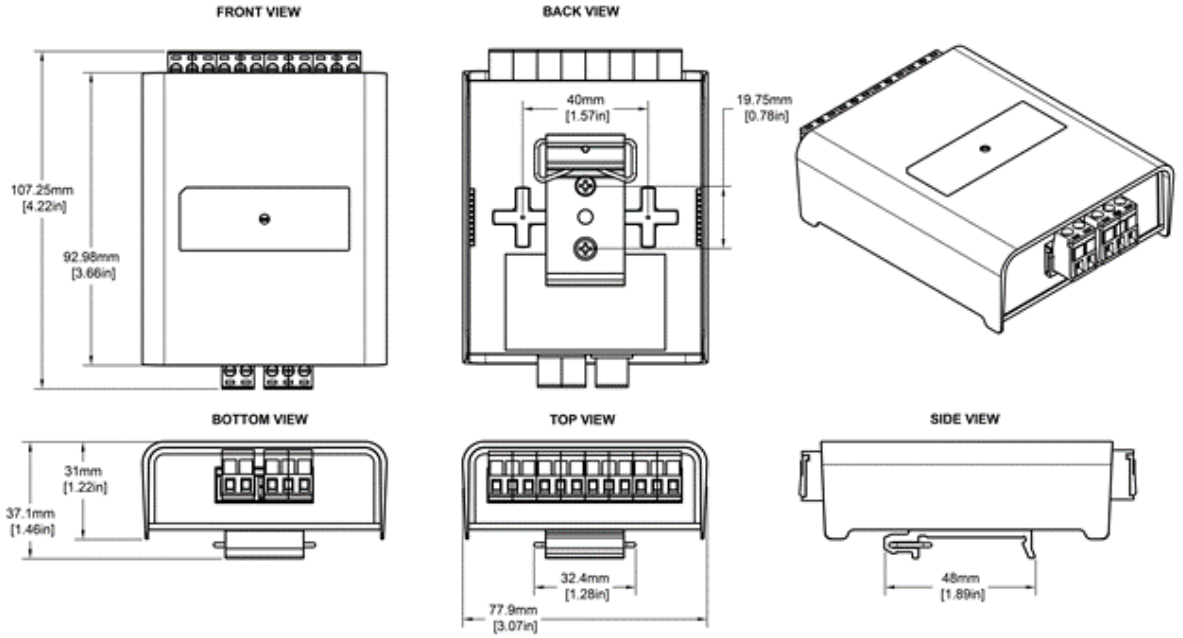

Mounting Options

Note: The surface mount tabs have been designed to hold the weight of the RDS4 only, excess force by caused by cable strain can cause damage.

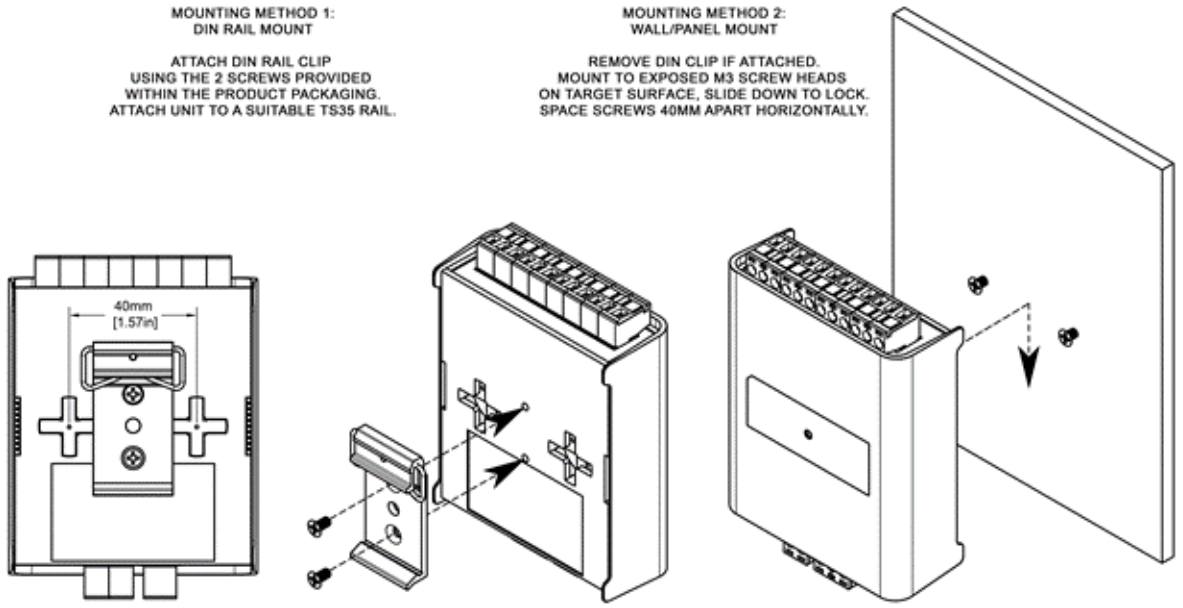

Wiring Diagrams

- To reduce the likelihood of voltage or Electro Magnetic Interference (EMI) being induced on the DMX lines, where possible, run control cabling away from mains electricity or devices that produce high EMI, (i.e., air conditioning units).
- The maximum cable distance DMX can be run without re-buffering is 300m (ft 984ft).
- Never exceed 32 devices in a DMX chain without an intermediary DMX splitter (i.e. another DIN RDS4).
- Terminate all DMX chains to eliminate signal bounce back. This can be done by wiring a 120 Ohm resistor between Data+ and Data- or with a 'DMX terminator'.
- To ensure a reliable connection, ENTTEC recommends the use of cable ferrules for all stranded cables connected to the DIN RDS4's screw terminals.
- When using multiple DIN RDS4 units to increase the number of DMX input ports on your installation, do not double wire Inputs together for the input, (thereby making a pass-through). Instead, use one of the four outputs to connect to the next RDS4 input. Using the input as a passthrough will likely result in 'RDM clashing'.

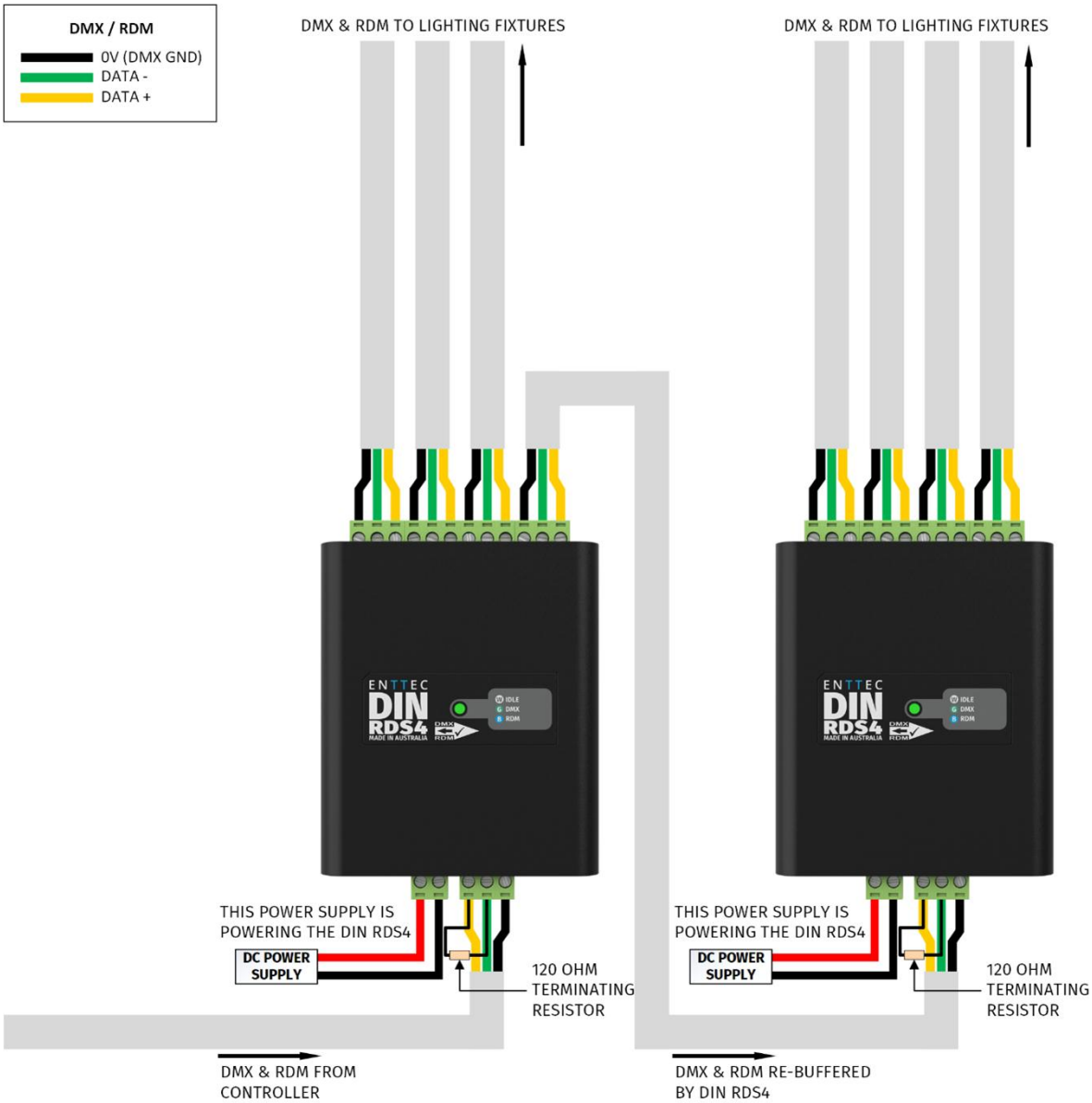

Functional features

1>4 Splitter

The DIN RDS4 takes a DMX512-A input from a control source and replicates it onto each of its 4 outputs. This allows more flexible cabling as opposed to running a single long DMX chain from the DMX controller through each fixture, (up to 32 DMX devices can be connected per output).

RDM (ANSI E1.20)

The DIN RDS4 supports the RDM protocol (ANSI E1.20) allowing devices connected to any of its four outputs to communicate back to the DMX controller.

Hardware features

- Forward facing LED status indicator.
- 1500v Opto-isolation between each port.
- 1* DMX/RDM input.
- 4* DMX/RDM outputs.
- 1* 2 Pin DC power input - phoenix 7->24v.
- Pluggable terminal blocks.
- Electrically insulated ABS plastic housing.
- Surface or TS35 DIN mount (using included DIN Clip accessory).

LED status indicator

The DIN RDS4 comes with a forward facing RGB LED indicator. When in operation, the DIN RDS4 led will change between a combination of these states. The LED colour signifies the related activity:

LED Color	DIN RDS4 Status
White	Idle
Green	DMX Data Receiving
Blue	RDM Activity

Out of the Box

The DIN RDS4 requires no configuration, simply wire it up following the wiring diagram within this user manual and add power.

Screw Terminal Connectors

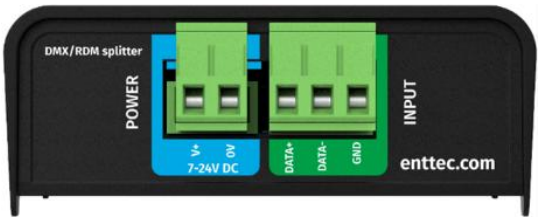

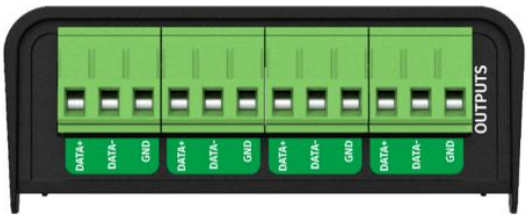

Servicing, Inspection & Maintenance

- **The device has no user serviceable parts. If your installation has become damaged, parts should be replaced.**
- **Power down the device and ensure a method is in place to stop the system from becoming energized during servicing, inspection & maintenance.**

Key areas to examine during inspection:

- Ensure all connectors are mated securely and show no sign of damage or corrosion.
- Ensure all cabling has not obtained physical damage or been crushed.
- Check for dust or dirt build up on the device and schedule cleaning if necessary.
- Dirt or dust buildup can limit the ability for a device to dissipate heat and can lead to damage.

The replacement device should be installed in accordance with all steps within the installation guide.

To order replacement devices or accessories contact your reseller or message ENTTEC directly.

Cleaning

Dust and dirt build up can limit the ability for the device to dissipate heat resulting in damage. It's important that the device is cleaned in a schedule fit for the environment it is installed within to ensure maximum product longevity.

Cleaning schedules will vary greatly depending on the operating environment. Generally, the more extreme the environment, the shorter the interval between cleaning.

- **Before cleaning, power down your system and ensure a method is in place to stop the system from becoming energized until cleaning is complete.**

- **Do not use abrasive, corrosive, or solvent-based cleaning products on this device.**
- **Do not spray device or accessories. The device is an IP20 product.**

To clean an ENTTEC device, use low-pressure compressed air to remove dust, dirt and loose particles. If deemed necessary, wipe the device with a damp microfiber cloth.

A selection of environmental factors that may increase the need for frequent cleaning include:

- Use of stage fog, smoke or atmospheric devices.
- High airflow rates (i.e., in close proximity to air conditioning vents).
- High pollution levels or cigarette smoke.
- Airborne dust (from building work, the natural environment or pyrotechnic effects).

If any of these factors are present, inspect all elements of the system soon after installation to see whether cleaning is necessary, then check again at frequent intervals. This procedure will allow you to determine a reliable cleaning schedule for your installation.

Package Contents

- DIN RDS4
- TS35 DIN Clip & 2* Torque T10 self-tapping screws

Note: The DIN RDS4 is not provided with a power supply.

Ordering Information

For further support and to browse ENTTEC's range of products visit the ENTTEC website.

Item	Part No.
DIN RDS4	72004